ISBN : 978-81-909853-5-2

IRPEE -2021

INTERNATIONAL CONFERENCE ON

Innovative Research in Power and Energy Engineering

26th March,2021

ORGANIZED BY

ARASU ENGINEERING COLLEGE, KUMBAKONAM

IN ASSOCIATION WITH

INDIAN SOCIETY FOR TECHNICAL EDUCATION

&

INSTITUTE FOR ENGINEERING RESEARCH AND PUBLICATION (IFERP)

IRPEE-2021

International Conference on
"INNOVATIVE RESEARCH IN POWER AND ENERGY ENGINEERING"

26th March, 2021

In association with:
Indian Society for Technical Education
&
Institute For Engineering Research and Publication [IFERP]

Organized by

Department of Electrical and Electronics Engineering
Arasu Engineering College,
Approved by AICTE-Affiliated to Anna University-Accredited by NBA,
Accredited by NAAC, Recognized by UGC under 2(f) & 12(B)
Chennai Main Road, Kumbakonam-612501.

PREFACE

The objective of this conference is to provide a forum for researchers, Educators, Engineers, Scientists and Government officials involved in the general areas of Electrical, Electronic and Mechanical Engineering from different parts of the country and abroad to disseminate the latest research results and exchange the views and future research directions in the following fields:

Smart Power System, Artificial Intelligence, Power Electronics, Energy and Embedded system

Smart Power System	Artificial Intelligence	Power Electronics
❖ Energy Storage System And Its Issues ❖ Efficient Control Of Power Electronic Converters And Drives ❖ DC and AC Micro grids and issues ❖ Smart Grid And Issues ❖ Energy Management and Audit ❖ Green Energy Sources And Its Issues ❖ Power System Optimization And Applications ❖ Economic Dispatch ❖ Distributed Power Generation ❖ Power System Deregulation ❖ Power System Modeling, Simulation And Analysis	❖ Artificial Intelligence ❖ Deep Learning ❖ Machine Learning ❖ Fuzzy Logic Control ❖ Neural Networks ❖ Genetic Algorithm ❖ Soft Computing Technologies ❖ Scheduling and Optimization Techniques ❖ Expert System ❖ Biomedical Application	❖ Analysis Design ❖ Special Electrical Machines ❖ Control And Applications Of Electrical Machines And Drives ❖ Biomedical Power Electronics ❖ Control of Power Converters ❖ Special Power Electronic Systems and Applications ❖ Consumer Power Electronics ❖ Application Of Power Electronics In Power System And Generation ❖ Application and Design of Power Electronic System

Energy and Embedded System	
❖ Fuel Cell ❖ Electric Vehicle ❖ Battery Management System ❖ Electro-Mechanical Energy Conversion	❖ IoT Concept ❖ Cloud Computing ❖ Sensor Networks ❖ Wind And Solar System

- ❖ The conference is not limited by the above mentioned topics and application areas and invites researchers, engineers and faculty to present their high-quality research articles in various above mentioned related fields.

Message from the Chairman

It is a great pleasure for me to congratulate the department of Electrical and Electronics Engineering for their awful conduct of "IRPEE -'21". A little process everyday leads to big results. That's shown by the students of EEE by organizing this magnificent event named "IRPEE -'21".

The "IRPEE -'21" has been organized at the time where the core industry turn around towards hiring B.E graduates everywhere. Students should have a position to approach all the issues. They should bear in mind that every challenge results in new opportunities. Like how the man who took our nation to pride in US conference named SWAMI VIVEKANANDA spilled out that "take up one idea". Take that one idea in your life, think of it, dream of it, work on that idea until you achieve it.

This maiden attempt of organizing such event out a souvenir in a lofty manner is greatly commendable for the sincere efforts put forth both by the staff and students. The credit and acclaim unambiguously goes not only to the Electrical Department but also to the institution as well. Let the almighty bless you all for a bright future.

With Wishes

Mr.R.Thirunavukkarasu,M.A.,
Founder&Chairman

Message from the Vice Chairman

My pride and exultation know no bounds on hearing that the department of EEE of our Arasu Engineering College brings out its International Conference **Innovative Research in Power and Energy Engineering** "IRPEE -'21". In the sphere of technical education there is no room for a sense of complacency.

It is ever the move and nothing should be allowed to deter its progress. It is a well-known fact that long term impact and victorious implementation of any scheme necessitate coordinate effort of many minds involved in all sectors.

I am extremely pleased with the enthusiasm of the students that is kept latent incessantly to speak off whenever warranted by the occasion. The undeterred technological journey towards the pinnacle of excellence is certain.

"With best wishes for success"

Mr.T.SenthilKumar,B.Sc.,
Vice-Chairman

Message from the Principal

Warm and Happy greetings to all. I am immensely happy that EEE department of our college is organizing an International Conference on “Innovative Research in Power and Energy Engineering” (IRPEE-’21) on Recent trends in Smart Power System, Artificial Intelligence, Power Electronics, Energy and Embedded system, on 26.03.2021 and is going to present a collection of various technical papers in the proceedings.

Under the able guidance of our management AEC continues to march on the way of success with confidence. The sharp, clear sighted vision and precise decision making powers of our management made our college to say competitive.

The dedicated HODs and staff members and disciplined students of AEC are the added features of our college. The role of students in building the nation cannot be overlooked and students at AEC are trained in all aspects to become a successful engineer and good citizen. On this occasion I would like to wish the students all the very best.

I also congratulate HOD, staff members, students of EEE departments, Participants from our colleges and other colleges for their efforts in organizing and participating in this conference and wish the conference all the success.

Dr. T.Balamurugan M.E., Ph.D.,
Principal

Message from the Vice Principal

It gives me immense pleasure in conveying my best wishes to the Department of Electrical and Electronics Engineering for organizing the second **International Conference on Innovative Research in Power and Energy Engineering (IRPEE'21)** which brings the students, faculty members, research scholars and industry professionals on a common platform to deliberate, explore and contribute their research to discuss the latest advancements and future directions in emerging areas of Engineering and Technology.

We welcome you all to AEC and hope that this conference will act as a medium for all of us present here to ponder upon the topic of discussion, challenge us to strive towards it and inspire us at the same time. Thank you

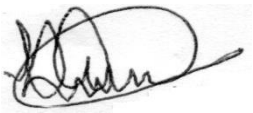

Dr. KalaimaniShanmugamM.Tech., Ph.D.,

Vice Principal

Message from the Dean Academics

Greetings to all!!!

I am very much delighted to know that Department of Electrical and Electronics Engineering of our college is organizing an International conference on “Innovative Research in Power and Energy Engineering” (IRPEE-‘21)”on 26th March 2021.

This international conference will surely be one more feather in the crown of EEE department of our college. I appreciate the organizing committee for showing keen interest in organizing a successful Conference and contributing new ideas and research findings.

I congratulate HOD, staff members, students of EEE department, participants from various colleges for their efforts in bringing this conference grand success and I wish them for their endeavors to spread knowledge.

Dr.M.Rukmangathan M.Sc.,CSIR- NET-LS.,Ph.D.,

Professor & Dean (Academics)

Message from Convener

I feel, a great pleasure and pride of having such a most appreciative and dynamic team of faculty and solicitous students who are interpolating interminable effort in all their endeavors.

Inaugurating the International conference “IRPEE- 21” is another golden milestone of their team work.

I cordially congratulate my team of deserving people to make the function a grand success.

Dr.C.Venkatesan M.E.,Ph.D.,
Head of the Department/ EEE

Message from Convener

It is my great pleasure and privilege of having such an excellent and young dynamic team of faculty, Students and Technicians who are encouraging and motivating in all their endeavors.

Inaugurating the international conference“IRPEE-21” is another milestone of our very good and excellent team.

I cordially congrats my team and my colleagues to make this conference a grand success.

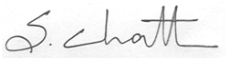

Mr.S. Chandrasekaran M.E., (Ph.D.,)

Convener

ABOUT ARASU ENGINEERING COLLEGE

Arasu Engineering college at Kumbakonam in Thanjavur district established by Sri ThirunavukkarasuDhanalakshmi Educational and charitable trust in the year 2000 is doing yeoman service in the field of technical education and research and won the hearts of parents and students.

The pride of the institution is that Sri ThirunavukarasuDhanalakshmi Educational and Charitable Trust caters to the knowledge thirst of the youth. Arasu Engineering College is approved by AICTE, New Delhi and affiliated to Anna University, Accredited by NBA, Accredited by NAAC and Recognized by UGC under 2(f) and 12(B). It is an ISO 9001-2008 certified institution for its merits and continual improvements.

The college offers its students infrastructural facilities of the most modern kind. It has large spacious and airy classrooms, laboratories with latest equipments, large drawing halls, computer lab, air conditioned seminar halls, library, etc., making the learning process more effective. Each room is spaciously large to seat students comfortable to do their academic and practical works.

ABOUT THE DEPARTMENT OF ELECTRICAL AND ELECTRONICS ENGINEERING

The Department of Electrical and Electronics Engineering was established in the year 2002-03 with a student intake of 60. It strives hard to develop world class self disciplined Electrical Engineers, who will be responsible for uplifting the national economy and humanity.

The department of EEE is accredited by NBA. It has a team of highly qualified, dedicated and motivated faculty members. It has been evolved into an exciting high technology discipline covering a wide spectrum of engineering activities. For young people, it provides employment opportunities of various natures and one can choose a career to suit his/her aptitudes.

VISION

The Department's commitment is to develop globally acknowledged Electrical and Electronics Engineering Professionals with involvement in research for promoting innovations and incubating Entrepreneurship in the field.

MISSION

DM1 (Professional Competency): Development of globally competent Electrical and Electronics Engineering Professionals by imparting world class excellent quality technical education imbibed with proficiency, creativity, moral ethics and human values.

DM2 (Innovative Research): Achievement of innovations by promoting research capabilities and providing state-of-the-art laboratories to the students beyond their classroom learning.

DM3 (Communication Skills & Life Long Learning): Encouraging their communication skills by providing proper guidance and to motivate them in learning new skills for advancing their career and professional enrichment.

PROGRAM EDUCATIONAL OBJECTIVES (PEOs)

PEO1 (Technical Knowledge): Graduates will have the professional competency by applying their technical knowledge, analytical skills and creativity to solve the engineering problems.

PEO2 (Research & Higher Studies): Graduates will have the ability to pursue higher studies and to apply their knowledge in research for promoting innovations.

PEO3 (Entrepreneurship): Graduates will have immense qualities to develop their leadership skills and entrepreneurship skills for their successful career.

PROGRAM SPECIFIC OUTCOMES (PSOs)

PSO1: Design & Analysis: Graduates shall demonstrate their knowledge of mathematics, basic sciences, modern tools applications and engineering concepts in the domain of Electrical Engineering in the areas such as design, manufacturing, testing and commissioning.

PSO2: Power Electronics: Graduates shall utilize their expertise in power electronics for efficient conversion and control of electrical power and electrical machineries**.**

PROGRAM OUTCOMES (POs)

PO1. Engineering knowledge: Apply the knowledge of mathematics, science, engineering fundamentals, and an engineering specialization to the solution of complex engineering problems.

PO2. Problem analysis: Identify, formulate, review research literature, and analyze complex engineering problems reaching substantiated conclusions using first principles of mathematics, natural sciences, and engineering sciences.

PO3. Design/development of solutions: Design solutions for complex engineering problems and design system components or processes that meet the specified needs with appropriate consideration for the public health and safety, and the cultural, societal, and environmental considerations

PO4. Conduct investigations of complex problems: Use research-based knowledge and research methods including design of experiments, analysis and interpretation of data, and synthesis of the information to provide valid conclusions.

PO5. Modern tool usage: Create, select, and apply appropriate techniques, resources, and modern engineering and IT tools including prediction and modeling to complex engineering activities with an understanding of the limitations.

PO6. The engineer and society: Apply reasoning informed by the contextual knowledge to assess societal, health, safety, legal and cultural issues and the consequent responsibilities relevant to the professional engineering practice.

PO7. Environment and sustainability: Understand the impact of the professional engineering solutions in societal and environmental contexts, and demonstrate the knowledge of, and need for sustainable development.

PO8. Ethics: Apply ethical principles and commit to professional ethics and responsibilities and norms of the engineering practice.

PO9. Individual and team work: Function effectively as an individual, and as a member or leader in diverse teams, and in multidisciplinary settings.

PO10. Communication: Communicate effectively on complex engineering activities with the engineering community and with society at large, such as, being able to comprehend and write effective reports and design documentation, make effective presentations, and give and receive clear instructions.

PO11. Project management and finance: Demonstrate knowledge and understanding of the engineering and management principles and apply these to one's own work, as a member and leader in a team, to manage projects and in multidisciplinary environments.

PO12. Life-long learning: Recognize the need for, and have the preparation and ability to engage in independent and life-long learning in the broadest context of technological change.

ADVANCED ELECTRICAL RESEARCH ORGANIZATION-AERO

The students' association of our EEE department named Advanced Electrical Research Organization (AERO) was developed in the year 2006, to enhance the Technical ideas of the Electrical Engineering students and also to cultivate their knowledge towards the upcoming scientific development. From the auspicious beginning our AERO, organizes various Symposia, Workshops, National & International level technical conferences that import tremendous technological revolution resulted in numerous Technical & Renewable projects on recent trends.

It indicates the spark of wisdom in the minds of upcoming Electrical Engineers on various fields that they have to survive in their future. It enables the students to be filled up with skills, inter personality development and human resource management.

AERO is projecting the Engineers to be trained with industrial aspects by means of conducting PCB design training, winding and rewinding works on Motors, PLC& SCADA etc.

Some public societies like Tamil Nadu Energy Development Agency (TEDA), joined their hands with AERO and thereby yield many motivating and blowing projects on agriculture, rainy etc.

The AERO needs your wishes as its fourteenth year of technical service, to get nourished and to be a part of many scientific societies so that to avail a new generation of Electrical Engineers.

ARASU ENGINEERING COLLEGE,

KUMBAKONAM – 612 501

Approved by AICTE - Affiliated to Anna university- Accredited by NAAC
Accredited by NBA-Recognized by UGC under 2(f) and) 12(B)

DEPARTMENT OF ELECTRICAL AND ELECTRONICS ENGINEERING

Cordially invites you to the
International Conference on

"Innovative Research in Power and Energy Engineering"

(IRPEE-'21)

In association with

Indian Society for Technical Education

on March 26th 2021 in the Seminar Hall - I.

Dr. **R. Swarnalatha,** Assistant Professor, Birla Institute of Technology and Science Pilani, Dubai campus.	Dr. **P. Raja,** Associate Professor, National Institute of Technology, Tiruchirappalli.	Dr. **G. Ganesan,** Assistant Professor E.G.S.Pillai Engineering College, Nagapattinam.

have kindly consented to be the Chief Guests and
deliver the inaugural and keynote address
in the presence of

Dr. **M. Rukmangathan** Dean- Academics	Dr. **Kalaimani Shanmugam** Vice Principal	Dr. **T. Balamurugan** Principal

With the Blessings and august presence from

Prof. **S. Kothandapani** Advisor	Shri. **T. Senthil Kumar** Vice Chairman	Shri. **R. Thirunavukkarasu** Chairman

ADVANCED ELECTRICAL RESEARCH ORGANIZATION

Agenda

Inauguration- 10.00 a.m.

- Invocation
- Welcome Address - **Mr.S.Chandrasekaran**, Convener/IRPEE
- Presidential Address - **Dr. T. Balamurugan,** Principal
- Felicitation Address - **Dr. Kalaimani Shanmugam,** Vice Principal
  Dr. M. Rukmangathan, Dean- Academics
- Introduction of Chief Guest - **Mrs. K. Kalpana,** Coordinator/IRPEE
  Mr. A. Balasubramanian, Coordinator/IRPEE
  Mr. R. Vinoth, Coordinator/IRPEE
- Conference Proceedings & CD Release - The Principal
- Inaugural Address - **Dr.R.Swarnalatha**
  Assistant Professor,
  Birla Institute of Technology and Science Pilani,
  Dubai campus.

Keynote Address	
Dr. **P. Raja ,** **Associate Professor,** **National Institute of Technology,** **Thiruchirappali**	Dr. **G. Ganesan,** **Assistant Professor,** **E.G.S.Pillai Engineering College,** **Nagapattinam**

- Tea Break
- Paper Presentation - Venue 1 (Seminar Hall – I)
  Venue 2 (Smart class - EEE)
  Venue 3 (Power Electronics Lab)
- Valedictory - 04.30 p.m
- Valedictory Address & Distribution of Certificate - The Principal
- Vote of Thanks – Mr. M. Thiyagarajan, Assistant Professor/EEE
- National Anthem

KEYNOTE SPEAKERS

Dr. R. Swarnalatha,
Assistant Professor,
Birla Institute of Technology and Science Pilani,
Dubai campus

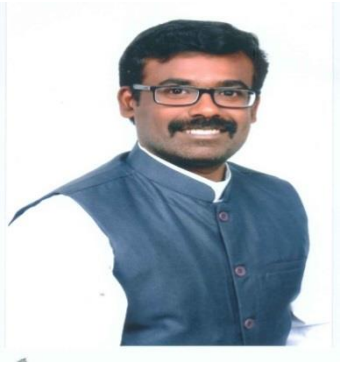

Dr.P.Raja
Assistant Professor
National Institute of Technology
Tiruchirappalli

Dr. G.Ganesan,
Assistant Professor
E.G.S.Pillai Engineering College,
Nagapattinam

International conference on

"Innovative Research in Power andEnergy Engineering"

(IRPEE–'2021)

ORGANIZING COMMITTEE

Over all Coordinators: **Mrs. K. Kalpana, M.E., (Ph.D.,)**

Mr. A. Balasubramanian, M.E., M.B.A., (Ph.D.,)

Mr. R. Vinoth, B.E., M.Tech.,

Sl. No	Name of the Staff	Nature of the work
Finance, Invitation , Certificate and Proceedings		
1.	Mrs. K. Kalpana Mr. A. Balasubramanian Mr. R. Vinoth	Invitation Design and Mailing , Certificate and Sticker Design, Preparation of proceedings
Registration and Certificate		
2.	Mrs.M.Saranya	Conference Certificate writing and Collecting feed back
Hall Arrangements		
3.	Mr.P.Alexraj	Seating & Stage Arrangement , flux
Reception and Compeering		
4.	Mrs.M.Nivedha	Arrangement of reception, Compeering
Photo & Media		
5..	Mr.R.Malarvannan	Photo, Video, Media
Jury Members Arrangement		
6.	Mr.M.Thiyagarajan	Momentoes
Catering and Refreshment		
7.	Mr.R.Nedumaran	Refreshment
Event Management		
8.	Mr.S.Srinivasan	Technical session arrangement
Public addressing system		
9	Mr.G.Rathnasamy	Public Addressing system and LCD, Projector
Certificate Dispacth		
10	Mr.E.Silambarasan	Distribution of certificate

TECHNICAL ADVISORY COMMITTEE

- **Dr.S.Parasuraman**
  Professor, Monash University, Malaysia.
- **Dr.Elango Natarajan**
  Professor, Monash University, Malaysia.
- **Dr.Prakash Gajanan Burade**
  Professor & Head, Sandip Foundation, Nasik.
- **Dr.M.Senthil Kumar**
  Professor & Principal, Karaikudi Institute of Technology, Karaikudi
- **Dr.K.Navin Sam**
  Assistant Professor,
  National Institute of technology, Puducherry.
- **Dr.R.Anandha Kumar**
  Assistant Professor, Government College of Engineering, Thanjavur.
- **Dr.A.Albert Martin Ruban**
  Professor, Kings College of Engineering, Thanjavur.
- **Dr.V.S.Bharath**
  Professor & Head,
  The Oxford College of Engineering, Bengalaru.
- **Dr.G.Giftson Samuel**
  Professor,
  Sir Isac Newton College of Engineering & Technology, Nagapattinam.
- **Dr. T.Suresh Padmanaban**
  Professor, EGS Pillai Engineering college, Nagai.
- **Dr.S.Ganesan**
  Assistant Professor, Government Engineering College, Salem.
- **Dr. T.D. Sudhakar**
  Professor, St.Joseph's Engineering College, Chennai
- **Mr.Arun Ramasamy**
  Senior Manager, ABB Technologies, Chennai.
- **Mr.J.Senthil Kumar**
  Senior Engineering Manager (Electrical), L&T Construction, Chennai.

ARASU ENGINEERING COLLEGE, KUMBAKONAM – 612501

DEPARTMENT OF ELECTRICAL AND ELECTRONICS ENGINEERING

INTERNATIONAL CONFERENCE (IRPEE – ’21)

SYNOPSIS

CONTENTS

CONTENTS

CONTENTS

CONTENTS

CONTENTS

CONTENTS

CONTENTS

CONTENTS

CONTENTS

IRPEE-2021

International Conference on
"INNOVATIVE RESEARCH IN POWER AND ENERGY ENGINEERING"
(Virtual Conference)

26th March, 2021

ABSTARCTS

&

PAPERS

Android Based Diagnosis & Management of Plant Disease Using Tensorflow

Ramesh S, B.E.-CSE-Final Year, Care Group of Institutions, Trichy
Zumaana Haseen A, B.E.-CSE-Final Year, Care Group of Institutions, Trichy

Abstract:--

In support of the Plant Village Project, we aim to help smallholder farmers grow more food. Farmers who don't have the outreach to beat crop diseases usually feel helpless or become ignorant. The result of this is a lower than average yield of crop production. We feel these small losses in crop production not only have an impact on the lives of these small farmers but also create an indirect impact on the GDP of a country.

The android application developed for the purpose provides the services while keeping in mind the ease for the user to interact with it. The application provides a handy camera integration to allow the farmer to click an image of the crop he wishes to diagnose. This image is processed in the backend using a deep learning model to classify the plant disease. It can detect any disease on the plant leaves.

Further, it gives information about the parent plant and recommendations on how to improve the plant health and along with information of the natural breeding environment of the plant. If there is any confusion left by the AI, then the app also gives information on symptoms of the disease. This is pretty helpful from the farmer's point of view as information like these help the farmer to catch early disease symptoms, recognize current infections and also guides how these diseases can be cured.

We used convolutional networks for image classification of the disease classes. We converted the model and optimized it using the tensorflow lite format to be used on the android application in memory and time-efficient manner. The tensorflow lite converts the large heavy deep learning models to a smaller and mobile hardware supportive format. It also quantizes the parametric learning weights to reduce the model file size.

The android application was developed using the android studio framework. The different phases of the application involve a live camera feed in the beginning. The user clicks an image from the camera feed. The application then displays all the relevant information about the prediction for the farmer's help.

By this Methodology, we can assure with managing all sorts of disease identification. It reduces the number of plants dying due to improper identification of disease. The main aim was to learn and design a machine learning application development inside an Android application. Providing flexibility of implementation of tensorflow framework inside any environment. This helped in creating our own android application which uses machine learning.

Keywords:

Android Application, Machine Learning, Prediction, Plant Diseases, TensorFlow, Image Dataset, Farmer.

Automatic Fish Food Feeder and Pond Monitoring System

K.Kalpana, Assistant Professor, Department of Electrical and Electronics Engineering, Arasu Engineering College, Kumbakonam.
P.Guna, UG Scholar, Department of Electrical and Electronics Engineering, Arasu Engineering College, Kumbakonam.
T.Ragavi, UG Scholar, Department of Electrical and Electronics Engineering, Arasu Engineering College, Kumbakonam.
S.Shifa Farveen, UG Scholar, Department of Electrical and Electronics Engineering, Arasu Engineering College, Kumbakonam.
S.Sudha, UG Scholar, Department of Electrical and Electronics Engineering, Arasu Engineering College, Kumbakonam.

Abstract:--

Auto fish feeders are a perfect device to ensure a consistent feeding regimen for aquarium even when you are not around to feed them. Fish farming pond is an artificial man made eco system. The aquaculture farmer used the intensive culture has to be highly attentive because any mishaps would prove costly. The feeding time for the fish is very important for these farmers. Besides, it is an important to determine the amount of feed fed to the fishes. This project involves designing and building a prototype of an automatic fish feeder for cultivation pond usage. This means the basic concept of the machine helps to feed the fish at a specific time set and also able to cover the whole pond area which comes in various sizes.

IoT Based Multifunctional Agribot

U.Jeyamalar, Assistant professor, Dept of ECE, Kings College of Engineering, Pudhukkottai, Thanjavur .
T.Nisha, Student, Dept of ECE, Kings College of Engineering, Pudhukkottai, Thanjavur .
J.Juliyat, Student, Dept of ECE, Kings College of Engineering, Pudhukkottai, Thanjavur .
V.G.Amirtha, Student, Dept of ECE, Kings College of Engineering, Pudhukkottai, Thanjavur .

Abstract:--

This paper aims to design an agricultural robot, which helps the people to survive where it performs operations such as digging of soil, sowing of seeds, spraying pesticide, cutting grass and ploughing and the detection of obstacles. This project is to design and control multifunctional mechanicm robot in agricultural field with the help of android application and IOT. In existing techniques were complicated as well as expensive. This AGRIBOT uses the renewable energy i.e. solar energy obtained from solar panel powered battery; it also consists of a visual obstacle detector and a Bluetooth module which is paired with a Bluetooth terminal application through which it is easily controlled and the instructions are given to the AGRIBOT for the operations to be performed .Hence this is a low cost AGRIBOT and is easy to operate without the need to go to the field personally it also helps the farmers to facilitate to ease work by reducing human effort, saving time and energy. By this farming can be done easily in any climatic condition irrespective of day and night. This agribot compared to other robots is very beneficial as it has multitasking functional system and advanced techniques for smart farming.

IoT Based Patient Health Monitoring System

Premkumar R, Department of Electrical & Electronics Engineering, SNS College of Technology Coimbatore
Jaganathan V, Department of Electrical & Electronics Engineering, SNS College of Technology Coimbatore
Kowsalya P, Department of Electrical & Electronics Engineering, SNS College of Technology Coimbatore
Ramkumar V S, Department of Electrical & Electronics Engineering, SNS College of Technology Coimbatore

Abstract:--

Now a days Health-care Environment has developed science and know ledge based on Wireless-Sensing node Technology oriented. Patients are facing a problematic situation of unforeseen demise due to the specific reason of heart problems and attack which is because of nonexistence of good medical maintenance to patients at the needed time. This is for specially monitoring the old age patients and informing doctors and loved ones. So we are proposing a innovative project to dodge such sudden death rates by using Patient Health Monitoring that uses sensor technology and uses internet to communicate to the loved ones in case of problems.

This system uses Temperature and heartbeat sensor for tracking patient health. Both the sensors are connected to the Arduino-uno. To track the patient health micro-controller is in turn interfaced to a LCD display and wi-fi connection to send the data to the web-server (wireless sensing node). In case of any abrupt changes in patient heart-rate or body temperature alert is sent about the patient using IoT. This system also shows patients temperature and heartbeat tracked live data with timestamps over the Internetwork. Thus Patient health monitoring system based on IoT uses internet to effectively monitor patient health and helps the user monitoring their loved ones from work and saves lives.

Healthcare monitoring system in hospitals and many other health centers has experienced significant growth, and portable healthcare monitoring systems with emerging technologies are becoming of great concern to many countries worldwide nowadays. The advent of Internet of Things (IoT) technologies facilitates the progress of healthcare from face-to-face consulting to telemedicine. This paper proposes a smart healthcare system in IoT environment that can monitor a patient's basic health signs as well as the room condition where the patients are now in real-time. In this system, five sensors are used to capture the data from hospital environment named heart beat sensor, body temperature sensor, room temperature sensor, CO sensor, and CO2 sensor. The error percentage of the developed scheme is within a certain limit (< 5%) for each case. The condition of the patients is conveyed via a portal to medical staff, where they can process and analyze the current situation of the patients.

Solar and Wind Integrated Hybrid Vehicle Charging Station

Gayathri.B , Dept of EEE, K.S.R.College of Engineering
Karthikeyan.P, Dept of EEE, K.S.R.College of Engineering
Harikrishna.S, Dept of EEE, K.S.R.College of Engineering
Dhaneshkumar.C, Dept of EEE, K.S.R.College of Engineering
Dr.C.Gowri Shankar, Associate professor, K.S.R.College of Engineering

Abstract:--
Electrical vehicles have become a major trend in the development of automobile industry.The integration of large-scale wind farms and large-scale charging stations for electric vehicles (EVs) into electricity grids necessitates energy storage support for both technologies. Matching the variability of the energy generation of wind farms with the demand variability of the EVs could potentially minimize the size and need for expensive energy storage technologies required to stabilize the grid.
This project investigates the feasibility of using the wind as a direct energy source to power EV charging stations. An interval-based approach corresponding to the time slot taken for EV charging is introduced for wind energy conversion and analyzed using different constraints and criteria, including the wind speed averaging time interval, various turbines manufacturers, and standard high-resolution wind speed datasets.

Adhar Card Verification Based On Online Polling

A.Balasubramanian, Assistant Professor, Department of Electrical and Electronics Engineering, Arasu Engineering College, Kumbakonam.
E.Venkatesh, UG Scholar, Department of Electrical and Electronics Engineering, Arasu Engineering College, Kumbakonam.
T.Prasanna, UG Scholar, Department of Electrical and Electronics Engineering, Arasu Engineering College, Kumbakonam.
V.Vignesh, UG Scholar, Department of Electrical and Electronics Engineering, Arasu Engineering College, Kumbakonam.
S.Sivanesan, UG Scholar, Department of Electrical and Electronics Engineering, Arasu Engineering College, Kumbakonam.

Abstract:--
An protected voting system to avoid the unlawful voting the authentication of an individual are made using biometric and capability of the voter is a affirmed using the Aadhar.
In order to avoid this proposed system will mainly focus on two sectors firstly to receive authenticated true vote and secondly to get votes from the migrants too in order to increase the voting percentage of our country.
As far now biometric authentication method is known to be the best and a true method for proving someone authenticity, so going ahead with this ,the proposed system will also work on your fingerprint which will be linked to your Aadhar card so as to prove your Authenticity.

Forecasting of Electric Power Manufacturing Process Using Machine Learning Method

V.Rajesh Kumar, Asst.Prof/EEE Dept, Shridevi Institute of Engineering & Technology,Tumkur
Dr.P.Aruna Jeyanthy, Asso.Prof/EEE Dept, Kalasalingam University,Krishnankoil
Dr.R.Kesavamoorthy, Asst.Prof/CSE Dept, Presidency University,Bangalore
Dr.L.Thangamariappan, Asst.Prof/CSE Dept, Veltech University,Chennai

Abstract:--

In this paper, we use the data collected through the E-IOT framework to apply in machine learning method to find the significant variables first and to forecast the electric power produced in the manufacturing process. Prior to the forecasting, pre-processing such as resampling of data was performed by using these variables. In order to pick the significant variables, 25 variables were derived using Lasso (least absolute squares and shrinkage optimization).one of the machine learning method.

Development of Artificial Sensitivity (Haptic) For Robotic Arm Using Mechano-Resistive Transducer

Gowtham R, Departmentof Electrical and Electronics Engineering, K.S.R.College of Engineering (Autonomous)
Kathiravan S, Departmentof Electrical and Electronics Engineering, K.S.R.College of Engineering (Autonomous)
Elambaruthi R, Departmentof Electrical and Electronics Engineering, K.S.R.College of Engineering (Autonomous)
Dr.E.Vani, Departmentof Electrical and Electronics Engineering, K.S.R.College of Engineering (Autonomous)

Abstract:--

As the applications of intelligent robots increase, so does their working material. However, dealing with unfamiliar objects is still a challenge for the robot. We review recent work on feature sensitivity and the understanding of robotic objects with uncertain information. In particular, in order to reduce the uncertainty of objects, we focus on how the robot perceives the features of an object and how the robot understands the object through a learning-based approach when the traditional approach fails. Uncertainty information is classified as geometric information and physical information. Based on the type of uncertain information, matter is further classified into three categories: geometric-uncertain objects, physical-uncertain objects and unknown objects. Furthermore, the feature sensitivity of these objects and approaches to robotic crossing are provided based on the different properties of each type of object. Finally, we summarize the reviewed approaches to uncertain objects and present some interesting issues for further investigation in the future. Semantic aspects such as object and compactness are difficult to perceive, and the object-oriented approach to learning networks plays a very important role as the unknown size of the task network increases.

IOT- Based Smart Control Model for Motor Cycle Durability Test

T.Pasupathi, Guide, Kings College of Engineering, Punalkulam.
P.Jayabharathi, Students, Kings College of Engineering, Punalkulam.
P.Lincy Freeda, Students, Kings College of Engineering, Punalkulam.
R.Priyadharshini, Students, Kings College of Engineering, Punalkulam.
M.Rochella, Students, Kings College of Engineering, Punalkulam.

Abstract:--

The Industrial Internet of Things (IIOT) is a new generation intelligent system consists of real time network and embedded systems . It combines the global internet and the physical world inorder to develop the manufacturing industries.This paper contains 4 layers (ie) data acquisition layer, processing layer, network layer, and control layer are proposed for designing to realize the intelligent management and remote control of motorcycle 's durability test. This architecture has a good guiding role for the design and development of IIOT . Basically,this paper develops the new Internet of Thing test platform management system with the ability of digital intelligent control, intelligent perception and remote intensive management. The system includes a management platform and five sub-system: front-end data acquisition system, control feedback and processing system, data transmission system, database management system, and cloud management system. By improving the interface capability of external (detection) parameters and establishing protocol relationships, the system become an open system with easy management, upgrading, extension, and compatibility. Thus realized the remote monitoring and control management on the endurance test process, improved the ability of cloud services through the cloud monitoring and management platform, and provides better modular system

Perception of Radio Frequency Based Indoor Assistive Direction and Localization for Visually Impairedpeople

M. Mohamed Sameer, Department of Electrical and Electronics Engineering, Arasu Engineering College, Kumbakonam
D. Sivapriyan, Department of Electrical and Electronics Engineering, Arasu Engineering College, Kumbakonam
J. Jayasuriya, Department of Electrical and Electronics Engineering, Arasu Engineering College, Kumbakonam
E. Praveen Kumar, Department of Electrical and Electronics Engineering, Arasu Engineering College, Kumbakonam
R.Vinoth, Assistant Professor, Department of Electrical and Electronics Engineering, Arasu Engineering College, Kumbakonam

Abstract:--

This project presents a new RFID-based assistive navigation and localization system to help blind and visually impaired people with indoor independent travel. The system detects dynamic obstacles and adjusts path in real-time to improve navigation safety. First, we develop an indoor map editor to parse geometric information from architectural models and generate a semantic map consisting of a RFID based pre implemented tags in the indoor area. By leveraging the reader service, we design a path alignment algorithm to bridge the data to mobile device and semantic map to achieve semantic localization by using Bluetooth mobile APK. Using the on-board RFID reader, we develop efficient obstacle detection and avoidance approach based on a time-stamped map Kalman filter (TSM-KF) algorithm. A multi-modal human-machine interface (HMI) is designed with speech-audio interaction and robust haptic interaction through an electronic Smart Cane. The developed prototype is low cost and as a low power embedded device for obstacle detection and obstacle identification, it is an alternative to machine vision systems. It has a radio-frequency identification reader, ultrasonic sensors, a global system for mobile communication module, a GSM communication module, buzzer, therfid module, a wet floor sensor, and object detection.Finally,field experiments and blind subjects demonstrate that the proposed system provides an effective tool to help blind individuals with indoor navigation and localization.

Forecasting of Electric Power Manufacturing Process Using Machine Learning Method

V.Rajesh Kumar, AP/EEE Dept, Shridevi Institute of Engineering & Technology,Tumkur
Malarvizhi.E, Research Scholar,EEE/Dept, Kalasalingam University,Krishnankoil.
Dr.P.Aruna Jeyanthy, Asso.Prof/EEE Dept, Kalasalingam University,Krishnankoil

Abstract:--

In this paper, we use the data collected through the E-IOT framework to apply in machine learning method to find the significant variables first and to forecast the electric power produced in the manufacturing process. Prior to the forecasting, pre-processing such as resampling of data was performed by using these variables. In order to pick the significant variables , 25 variables were derived using Lasso (least absolute squares and shrinkage optimization).one of the machine learning method.

Preparation of Vermicomposting System Using Automation Technology

R. Anbuselvan, Department of Electrical and Electronics Engineering, Arasu Engineering College, Kumbakonam.
S. Hariharan, Department of Electrical and Electronics Engineering, Arasu Engineering College, Kumbakonam.
P. Karthik, Department of Electrical and Electronics Engineering, Arasu Engineering College, Kumbakonam.
A. J. Mohamed Fasith, Department of Electrical and Electronics Engineering, Arasu Engineering College, Kumbakonam.
M.Saranya, Assistant Professor, Department of Electrical and Electronics Engineering, Arasu Engineering College, Kumbakonam

Abstract:--

The last few years have seen substantial progress in the field of smart objects (SOs): their number, diversity, performance and pervasiveness have all been quickly increasing and this evolution is expected to continue. To the best of our knowledge, little work has been made to leverage this abundance of resources to develop assistive devices for Visually Impaired People (VIP). However, we believe that SOs can both enhance traditional assistive functions (i.e. obstacle detection, navigation) and offer new ways of interacting with the environment. After describing spatial and non-spatial perceptive functions enabled by SOs, this article presents the SO2SEES, a system designed to be an interface between its user and neighboring SOs. The SO2SEES allows VIP to query surrounding SOs in an intuitive manner, relying on knowledge bases distributed on Internet of Things (IoT) cloud platforms and the SO2SEES's own back-end. To evaluate and validate the exposed concepts, we have developed a simple working implementation of the SO2SEES system using semantic web standards. A controlled-environment test scenario has been built around this early SO2SEES system to demonstrate its feasibility. As future works, we plan to conduct field experiments of this first prototype with VIP end users. INDEX TERMS Internet of Things cloud framework, OWL, smart objects, semantic web rule language (SWRL), visually impaired people (VIP).

Sensor Based Flood and Landslide Pre-Alert System

N. Akash, Department of Electrical and Electronics Engineering, Arasu Engineering College, Kumbakonam
R. Bharath, Department of Electrical and Electronics Engineering, Arasu Engineering College, Kumbakonam
N. PremGanesh, Department of Electrical and Electronics Engineering, Arasu Engineering College, Kumbakonam
R. Vinith, Department of Electrical and Electronics Engineering, Arasu Engineering College, Kumbakonam
M. Thiyagarajan, Assistant Professor, Department of Electrical and Electronics Engineering, Arasu Engineering College, Kumbakonam.

Abstract:--

After attending this lesson, the user would be able to understand the nature and causative factors of landslides, their characteristics, classifications, triggering mechanisms, and effects.The methods of controlling the effects of landslides, and avoiding their menace are also highlighted. Disaster management methods are to be adopted to mitigate the never ending natural hazards. This lesson is an important topic in disaster management.

Monitoring of deformation of structures and ground surface displacements during landslides and flood can be accomplished by using different types of systems and techniques. These techniques and instrumentation that can be classified as remote sensing or satellite techniques, photogrammetric techniques, geodetic or observational techniques, geotechnical or physical techniques are presented in this paper.

Solar Powered Smart Irrigation Control System Using IoT Method

Anil Kumar.T, Final Year UG student/EEE Dept, Shridevi Institute of Engg & Tech,Tumkur
V.Rajesh Kumar, AP/EEE Dept, Shridevi Institute of Engg & Tech,Tumkur
Mallikarjun S Barigal, Final Year UG student/EEE Dept, Shridevi Institute of Engg & Tech,Tumkur
Chandan Kumar Mehta, Final Year UG student/EEE Dept, Shridevi Institute of Engg & Tech,Tumkur

Abstract:--

The smart irrigation system was developed to optimize water use for agricultural crops, with the water requirements in irrigation being large; there is a need for a smart irrigation system that can save about 80% of the water. In the present scenario, availability of power and water are insufficient to satisfy the farmer's requirements. Traditionally, implemented techniques of irrigation are proving to be less futile as these are not good at multitasking different concerns which are a combination of availability of water, sources of energy and timely soil profile analysis. This proposed system aims at saving time and avoiding problems like insufficient of water. The system has a distributed wireless network of soil-moisture and temperature sensors placed in the root zone of the irrigation field. It also helps in water conservation by automatically providing water to the plants/gardens depending on their water requirements. It can also prove to be efficient in Agricultural fields, Lawns & Parks. As technology is advancing, there is always a chance of reducing risks and making work simpler. Embedded and micro controller systems provide solutions for many problems It is achieved by installing sensors in the field to monitor the soil temperature and soil moisture which transmits the data to the microcontroller for estimation of water demands of plants. Overall control system is powered by solar energy.

Spectrum Management in Railway Cognitive Radio Network

Suba .M, Assistant Professor, Dept. of Electronics and Communication Engineering, SRC, SASTRA Deemed University, Kumbakonam ,India.

Abstract:--

One of the major problems in wireless communication is spectrum management. With the increase in population, the number of people using the gadgets has been increased. Due to this, we are not able to manage spectrum efficiently. This project first examines the physical structure of the present railway wireless communication and determines the characteristics of chainlike distribution and cascade operation of the base stations along the railway. In this project we are using POMDP model along with reinforcement learning. As mentioned in the title we worked on cooperative learning based on machine learning. In this project we are using the three units namely spectrum sensing, spectrum sharing, spectrum management together to provide efficient spectrum in railways. In this project we used MATLAB software for stimulating the output.

Keywords:

Co-operative Spectrum Sensing, multi-Base Stations, Cognitive Radio/Mitola Radio, Poly-agent System, First User, Secondary User, Cognitive Radio Network, Cyclic Prefix, Bayesian- Adaptive Partially Observable Markov Decision Process.

Staggering Security Structure for Women

S.Swaminathan, Assistant Professor, Dept. of Electronics and Communication Engineering, SRC, SASTRA Deemed University, Kumbakonam ,India
B.Sivaranjini, UG Scholar, Dept. of Electronics and Communication Engineering, SRC, SASTRA Deemed University, Kumbakonam ,India
J.Roshini, UG Scholar, Dept. of Electronics and Communication Engineering, SRC, SASTRA Deemed University, Kumbakonam ,India
R.Vasunthra, UG Scholar, Dept. of Electronics and Communication Engineering, SRC, SASTRA Deemed University, Kumbakonam ,India

Abstract:--

Ladies nowadays are under danger. They have numerous difficulties to confront particularly in worry of their security. Although there are many systems that exist to serve women security purpose the need for advanced smart security system is increasing this paper clarifies about the made sure about electronic framework for ladies which includes an Arduino controller and sensors, or example, temperature, beat, sound sensors and innovation such GSM,GPS are utilized. At the point when a ladies is under danger, the gadget detects the adjustment in temperature, heartbeat and sound with the assistance of different sensors. At the point when any of the boundaries crosses as far as possible the gadget gets actuated and finds the area of the casualty utilizing the GPS module. By utilizing the GSM module the casualty's area alongside scope and longitude is sent to the particular contact number enlisted. A chemical spray is added to make the victim escape the situation by spraying it on the attacker which produces an irritation on the skin.

Keywords:
Arduino controller, GSM, GPS

Battery Operated Electric Vehicle Charger with Modified Bl Landsman Converter Design for Improved Power Quality

C.Dhinesh Kumar, Asst Professor and Supervisor, Department of Electrical and Electronics Engineering, Arulmigu Meenakshi Amman College of Engineering, Vadamavandal
Dhanalakshmi D, ME- Power System Engineering, Department of Electrical and Electronics Engineering, Arulmigu Meenakshi Amman College of Engineering, Vadamavandal

Abstract:--

To implement a new charger to charge a 48V EV battery of 100Ah capacity under transients in input voltage for Battery operated electric vehicle with power factor improvement at the frontend using a modified bridgeless Landsman converter at the front end.

Embedded System for Agricultural Monitoring Using Internet of Things (IoT) and Wirless Communiction

R. Vinoth, Assistant Professor, Arasu Engineering College, Kumbakonam, Thanjavur
P. Alexraj, Assistant Professor, Arasu Engineering College, Kumbakonam, Thanjavur

Abstract:--

The Internet of Things (IoT), the idea of getting real-world objects connected with each other, will change the way users organize, obtain and consume information radically. Internet of Things (IoT) enables various applications (crop growth monitoring and selection, irrigation decision support, etc.) in Digital Agriculture domain. The Wireless Sensors Network (WSN) is widely used to build decision support systems. These systems overcome many problems in the real-world. One of the most interesting fields having an increasing need of decision support systems is Precision Agriculture (PA). Through sensor networks, agriculture can be connected to the IoT, which allows us to create connections among agronomists, farmers and crops regardless of their geographical differences. With the help of this approach which provides real-time information about the lands and crops that will help farmers make right decisions. The major advantage is implementation of WSN in Precision Agriculture (PA) will optimize the usage of water fertilizers while maximizing the yield of the crops and also will help in analyzing the weather Conditions of the field.

Key Words –

Wireless Sensors Network (WSN), Internet of Things (IoT), Precision Agriculture (PA).

Artificial Intelligence in Legal Education Vis-À-Vis Profession: Glimpses from India

Dr. Ved Pal Singh Deswal, Senior Asst. Professor, Faculty of Law, Maharshi Dayanand University, Rohtak (Haryana) India

Abstract:--

A general definition of AI is the capability of a computer system to perform tasks that normally require human intelligence, such as visual perception, speech recognition and decision-making. Functionally, AI enabled machines should have the capability to learn, reason, judge, predict, infer and initiate action.

Multi Input Nine Level Inverter with Low TSV for Hybrid Energy System

S.Srinivasan, PG Scholar, Department of Electrical And Electronics Engineering, Arasu Engineering College, Kumbakonam
S.Chandrasekaran, Assistant professor, Department of Electrical And Electronics Engineering, Arasu Engineering College, Kumbakonam

Abstract:--

A Multi Input Nine-level Inverter (MINLI) topology is proposed in this paper which generates nine voltage levels in the output with fewer numbers of components.The nine voltage levels are produced through different plausible combinations of the multi input source and capacitors by using the power semiconductor switches.This reduces the conduction losses and improves the efficiency of the system. To reduce the switching loss of the power switches, gate signals are generated following a proposed modulation strategy. To validate the MINLI, a number of simulations are performed in Simulink.A comparison of the proposed inverter with the existing topologies shows that the number of required components and multi input sources are significantly lower. Therefore the proposed MINLI structure can be used in renewable energy systems to make the power generation process more efficient

Phase Noise Estimation and Reduction for Coherent Optical OFDM Systems

S.Swaminathan, Department of Electronics and Communication Engineering, Sastra Deemed University,Srinivasa Ramanujan Centre,kumbakonam,pincode, Tamilnadu

Abstract:--

The quasi-pilot-aided method has been proposed for optical OFDM for the phase noise estimation and reduction. In this method, the phases of data subcarriers are deliberately correlated to the transmitted pilot subcarriers. Due to this correlation, in the receiver allows the required number of pilots needed for a sufficient estimation and compensation of phase noise to be decreased by a factor of 2 in comparison with the traditional pilot-aided phase noise estimation method. The numerical simulation of a 40 Gb/s single polarization transmission system was carried, and the outcome of the investigation indicates that only 4 pilot subcarriers are necessary for effective phase noise estimation and reduction for coherent optical OFDM systems by applying quasi-pilot-aided phase estimation.

Keywords:-

Phase noise, pilot sub carriers, correlation, noise estimation and reduction, orthogonal frequency division multiplexing.

Two Stage Robust Control Design of CPG based on IOL interfaced with three phase SPPS

Uma Yadav, Department of Electrical Engineering J C Bose University of Science and Technology YMCA Faridabad, India
Dr. Anju Gupta, Department of Electrical Engineering J C Bose University of Science and Technology YMCA Faridabad, India
Dr. Rajesh Ahuj, Department of Electrical Engineering J C Bose University of Science and Technology YMCA Faridabad, India

Abstract:--

In recent, various MPPT techniques have already been proposed for generating constant power by setting limit around the MPPT. This would result in stabilisation of current and voltage waveform but whenever there is small change in solar irradiance occur, it results in poor performance of the grid. In order to overcome the above problem, design procedure of two stage high constant power generation (CPG) based on Input- Ouptut Linearizer (IOL) has been proposed along with its experimental result, indicating that proposed controller can be engaged in a practical environment. With this designed controller high performance and stable operation can be expected, even if there is change in solar irradiance. Further, regulation of photovoltaic output power according to set point can also be done making the system to operate at maximum power thereby increasing its efficiency.

Keywords

MPPT; IOL; CPG; SPPS; PV system.

6G Wireless Communication System of Application & Black vchain Technologies

[1] P.Kanimozhi, [2]A.Meena, [3]S.Rajalakshmi, [4]J. Vithya Sri
[1,2,3,4] Computer Science & Engineering MRK Institute of Technology, Kattumannarkovil- 608301, Tamil Nadu

Abstract - The demand for wireless connectivity has grown exponentially over the last few decades. Fifth-generation (5G) communications, with far more features than fourth-generation communications, will soon be deployed worldwide. A new paradigm of wireless communication, the sixth-generation (6G) system, with the full support of artificial intelligence, is expected to be implemented between 2027 and 2030. Beyond 5G, some fundamental issues that need to be addressed are higher system capacity, higher data rate, lower latency, higher security, and improved quality of service (QoS) compared to the 5G system.

This paper presents the vision of future 6G wireless communication and its network architecture. This article describes emerging technologies such as artificial intelligence, terahertz communications, wireless optical technology, free-space optical network, blockchain, three-dimensional networking, quantum communications, unmanned aerial vehicles, cell-free communications, integration of wireless information and energy transfer, integrated sensing and communication, integrated access-backhaul networks, dynamic network slicing, holographic beamforming, backscatter communication, intelligent reflecting surface, proactive caching, and big data analytics that can assist the 6G architecture development in guaranteeing the QoS

INTRODUCTION

THE RAPID development of various emerging applications, such as artificial intelligence (AI), virtual realiity (VR), three-dimensional (3D) media, and the Internet of Everything (IoE), has led to a massive volume of traffic [1]. The global mobile traffic volume was 7.462 EB/month in 2010, and this traffic is predicted to be 5016 EB/month in 2030 [2]. This statistic shows the importance of improving communication systems. We are heading toward a society of fully automated remote management systems. Autonomous systems are becoming popular in all areas of society, including industry, health, roads, oceans, and space. In this regard, millions of sensors are integrated into cities, vehicles, homes, industries, food, toys, and other environments to provide a smart life and automated systems.

Development

In this paper presents the vision of future 6G wireless communication and its network architecture. This article describes emerging technologies such as artificial intelligence, terahertz communications, wireless optical technology, free-space optical network, blockchain, three-dimensional networking, quantum communications, unmanned aerial vehicles, cell-free communications, integration of wireless information and energy transfer, integrated sensing and communication, integrated access-backhaul networks, dynamic network slicing, holographic beamforming, backscatter communication, intelligent reflecting surface, proactive caching, and big data analytics that can assist the 6G architecture development in guaranteeing the QoS. Besides, expected applications with 6G communication requirements and possible

technologies are presented. We also describe potential challenges and research directions for achieving this goal.

Related work

Trends in mobile communication:

The goal of B5G and 6G is to increase in the respective.The predicted growth of global mobile connectivity during
2020-2030 [33]. (a) total global traffic volume, (b) traffic volume per subscription. capability by a factor of 10–100 compared to the previous
mobile generation upgrades.

Specifications & Requirements:

6G will fill the gap between 5G and market demand. Based on the previous trends and predictions of future needs, the main objectives for the 6G systems.

Prospect & Applications:

Fully-AI will be integrated into the 6G communication systems. All the network instrumentation,management,physical-layer signal processing, resource management, service-based communications, and so on will be incor-porated by using AI .

Fundamental enabling technologies of 6G:

AI will also play a vital role in M2M, machine-to-human, and human-to- machine communications. It also prompts communication in the BCI.

Implementation

Standardization activities on 5G of the ITU radio communication sector
ITU-R were based on IMT-2020. Consequently, ITU-R probably releases IMT-2030, which summarizes the possible requirements of mobile communications in 2030 (ie 6G).ation.

A new implementation of 6G will cause a considerable network infrastructure cost.

CONCLUSION

Each generation of communication system brings new and exciting features. The 5G communication system, which will be officially launched worldwide in 2020, has impressive features. However, 5G will not be able to support the grow- ing demand for wireless communication in 2030 entirely.
Therefore, 6G needs to be rolled out. Research on 6G is still in its infancy and the study phase. This paper envisions
the prospects and ways to reach the goal of 6G communica- tion. In this paper, we presented the possible applications and the technologies to be deployed for 6G communication. We also described the possible challenges and research direc- tions to reach the goals for 6G. Besides clarifying the vision and goal of 6G communications, we have stated the various technologies that can be used for 6G communication.

REFERENCES:

[1] M. Giordani, M. Polese, M. Mezzavilla, S. Rangan, and M. Zorzi, “Toward 6G networks: Use cases and technologies,” IEEE Commun. Mag., vol. 58, no. 3, pp. 55–61, Mar. 2020.

[2] H. Viswanathan and P. E. Mogensen, “Communications in the 6G era,” IEEE Access, vol. 8, pp. 57063–57074, 2020.

[3] E. C. Strinati et al., “6G: The next frontier: From holographic mes- saging to artificial intelligence using subterahertz and visible light communication,” IEEE Veh. Technol. Mag., vol. 14, no. 3, pp. 42–50, Sep. 2019.

[4] W. Saad, M. Bennis, and M. Chen, “A vision of 6G wireless systems: Applications, trends, technologies, and open research problems,” IEEE Netw., vol. 34, no. 3, pp. 134–142, May/Jun. 2020.

[5] X. Shen et al., "AI-assisted network-slicing based next-generation wireless networks," IEEE Open J. Veh. Technol., vol. 1, pp. 45–66, Jan. 2020.

[6] E. Yaacoub and M. Alouini, "A key 6G challenge and opportunity— Connecting the base of the pyramid: A survey on rural connectivity," Proc. IEEE, vol. 108, no. 4, pp. 533–582, Apr. 2020.

[7] B. Mao, Y. Kawamoto, and N. Kato, "AI-based joint optimization of QoS and security for 6G energy harvesting Internet of Things," IEEE Internet Things J., early access, Mar. 23, 2020, doi: 10.1109/JIOT.2020.2982417.

[8] M. S. Sim, Y. Lim, S. H. Park, L. Dai, and C. Chae, "Deep learning-based mmWave beam selection for 5G NR/6G with sub- 6 GHz channel information: Algorithms and prototype validation," IEEE Access, vol. 8, pp. 51634–51646, 2020.

[9] F. Tang, Y. Kawamoto, N. Kato, and J. Liu, "Future intelligent and secure vehicular network toward 6G: Machine-learning approaches," Proc. IEEE, vol. 108, no. 2, pp. 292–307, Feb. 2020.

[10] S. Zhang, C. Xiang, and S. Xu, "6G: Connecting everything by 1000 times price reduction," IEEE Open J. Veh. Technol.,vol.1, pp. 107–115, Mar. 2020

A Fisherman Alert System for Border Crossing Using IoT

[1] A.Palanisamy,[2]C.Anuchandhar,[3]M.Boobalan, [4]P.Gokul, [5]A.Mathiyarasan
[1]Assistant professor,Department of Electronics and Communication Engineering, Nandha college of Technology.
[2,3,4] UG scholar, Electronics and Communication Engineering, Nandha college of Technology.

Abstract - Fisherman life have risk when who are surveying their life in sea. Mostly Sri Lankan solders are treaded our fisherman as prison and take custody and sometime their life is gone. All these kind of issue occur because identifying sea border between countries. Our paper will provide solution to this problem and improve safety of fisherman life in allpoint of view. For this, we have designed an embedded system to notifying sea border of our country by using IOT (Internet Of Things) and RF Transmitter Receiver. The embedded unit control overall system performance and compare pre-defined and present value of fisherman position and inform to them about their current location whether they are in safety zone or restricted zone. IOT and RF communication units' provider location of all zones of sea. The embedded unit interface with fisherman by LCD display. The paper aims at providing a system that will alert the fishermen well in advance and ensure maximum safety and peace at the border and also notify the family members and patrol system using by software. This will help and increase safety of fisherman life.

Key words: Analysis - Alert - Warning – Rescue

INTRODUCTION

In a Tamilnadu, each and every second, our one of fisherman life have risk when who are surveying their life in sea. But accidentally crossing border without knowledge, they get shot by the Lankan navy. This leads to loss in the both humans as well as their economic incomes. We have developed a system which eliminates such problems and saves the lives of the fishermen. Border systems have recently achieved interest to address concerns about national security. The major problem in protecting long stretches of borders is the need for large human involvement. This system is designed to avoid such kind of accidents and to alert the fishermen about border area well before using latest technology of Global Positioning System (GPS) and Global System for Mobile communication (GSM) and monitored using IOT.

LITERATURE REVIEW

In [1], J. E. Marca et al [6] has put forth the major challenges faced in designing a ubiquitous application. Android operating system is suggested as a best tool for designing context aware applications. Towards the end, author had featured an analysis report on performance of various mobile devices for a location aware computing.

In [2], Asim S,Daniel et al in their manuscript [10] have described on the anatomy of Android architecture. Components of Android platform such as Activity, Services, Content Providers and Broadcast Receivers were introduced thus providing a better insight of application development

In [3], R. Dinesh Kumar et.al. Alert system for fishermen crossing border using Android, March 2016. The application can be widely used by people in the border to find the

appropriate path to reach the destination. The notification will be sent to the border security forces which act as the server to all other devices that are operated by people in ships. The application will notify the information of where the devices are being located and intimate them

In[4] ,Pamarthi Satyanarayana et.al. International boundary scanning and ship surveillance system, March 2017. The islands, peninsulas and coastal countries have their boundaries in sea or ocean also. Most of the people in coastal areas have fishing as their occupation. Some also take tourists in ships.

Existing system:

The existing system using a GPS receiver which receives signal from the satellite and give the current location position of the boat.

The existing system is used to detect the border of the country through the specified longitude and latitude of the position.

The particular layer level border can be predefined and this can be stored in microcontroller memory.

The current value is compared with predefined values and if these values are same, immediately the particular operation will be done, the microcontroller gives instruction to the alarm to buzzer.

It also uses a message transmitter to send message to the base station which monitors the boats in the sea and sends information to fisherman.

ADVANTAGE:

• Reduce to cross the national border level.
• Used for security purpose for fisherman
• Easy maintenance.
• Low cost
• Not to stuck in national border. And also to avoid Gun shooting in national border.
• To increase rescue of fisherman

PROPOSED SYSTEM:

Our project will provide solution and improve safety of fisherman life in all point of view. For this, We have designed an embedded system to 3 stages of sea borders. First Stage: If Fisherman cross the first stage of sea border, Server will be intimate to the fisherman for be safety. Second Stage: If fisherman cross the second stage, Server will be warning to fisherman for near to National border. Final Stage:If Fisherman cross the final stage of sea border, the boat engine will automatically turned off. In case, the fisherman stuck in National border in any hazards. Server will intimate patrol to rescue of fisherman.

METHODOLOGY:

In this project we use RFID Reader reads the information from the tag using raspberry pi b+. BMP180 sensor senses Atmospheric pressure and alerts the hazards by buzzer. The zigbee pair data over long distances that fisherman reaches the warning border, the border security forces will send the notification to the LCD display in ship.

HARDWARE AND SOFTWARE: RFID READER AND TAG:

Radio-Frequency Identification (RFID) is the use of radio waves to read and capture information stored on a tag attached to an object. A tag can be read from up to several feet away and does not need to be within direct line-of-sight of the reader to be tracked.

Fig. RFID READER AND TAG

BUCK CONVERTER:

The buck converter is a ubiquitous DC-DC converter that efficiently converts a high voltage to a low voltage efficiently. Efficient power conversion extends battery life, reduces heat, and allows for smaller gadgets to be built.

The buck converter can be used in lots of cool applications.

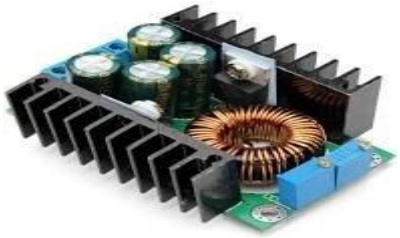

Fig. Buck converter

ZIGBEE PAIR:

Zigbee is a wireless technology developed as an open global standard to address the unique needs of low-cost, low-power wireless IoT networks

Fig:Zigbee module

BUZZER MODULE:

An Active Buzzer Alarm Module for Arduino is an audio signaling device, which may be mechanical, electromechanical, or piezoelectric. ...

Typical uses of buzzers include alarm devices, timers, and confirmation of user input such as a mouse click or keystroke..

Fig. Buzzer module

CIRCUIT DIAGRAM:

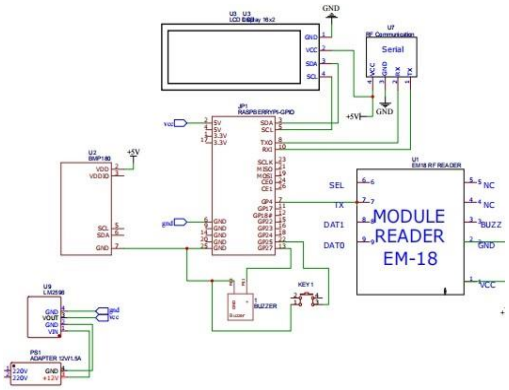

Fig. Circuit diagram

PUSH BUTTON:

A push to make switch allows electricity to flow between its two contacts when held in. When the button is released, the circuit is broken. This type of switch is also known as a Normally Open (NO) Switch.

Fig: Push Button

CONCLUSION:

Area based alarm administrations are fundamental segments for fisherman's, because of awful atmosphere conditions and slacking

of innovation in salvage bolster our angler's confronting an actual existence time issue with neighbor nations. On considering the issue we proposed an ease and simple climate alert framework for angler's which is utilized to follow their family members, companions and other fisherman's.

In the event that some fisher man confronting any issues like unexpected climatic changes or crisis mean this framework will help to the angler. Right now are going to screen climate state of the angling territory by utilizing sensors like stickiness and temperature, wind speed sensor and Rain sensor this sensor ceaselessly sense the angler angling zone consistently and send information to the server utilizing zigbee module constantly at whatever point they need any assistance implies there is crisis button is there on the off chance that they press mean alarm was sent to the specific primary server where they get salvage and GPS Location is additionally sent. On the off chance that the climate condition isn't acceptable additionally ready will sent naturally and bell will begin to ring to caution the other individual in the vessel. In typical climatic condition the information from sensor's and GPS area of the pontoon is constantly refreshed in the principle server and furthermore showed in LCD show

FUTURE SCOPE:

It is proposed as a low cost optimized technique using RFID and GSM mobile technology. At the national border, there will be RFID checking which reduces the threat of terrorism. At the same time, it will generate:
1.Automatic alarmingsystem. 2.Embedded System can design for easy to secure fishermen life using valid RF receiver Transmitter

REFERENCES:

1. Charles Finny Joseph J, Dinesh Kumar R, Shubin Aldo M, “Alert System for Fishermen Crossing Border using Android”, International Conference on Electrical, Electronics and optimization Techniques (ICEEOT)-2016.
2. Archana Gupta, Mohammed Abdul Qadeer, Sandeep Kumar Location Based Services using Android, 978-1-4244-4793-0/09, 2015IEEE.
3. Majid A. Al-Taee, Nabeel A. Al-Saber, Omar Khader.B, “Remote Monitoring of Vehicle Diagnostics and Location Using a Smart Box with Global Positioning System and General Packet Radio Service”, 1- 4244-1031-2 /07, 2018 IEEE. Asian Journal of Applied Science and Technology (AJAST) Volume 1, Issue 1, Pages - 37, February2017.
4. Pulathisi Bandara, Udana Bandara, “Tagciti: A Practical Approach for Location-Aware and Socially-Relevant Information Creation and Discovery for Mobile Users”, 978-1-4244-2489-4/08, 2015 IEEE.
5. Patricia Dockhorn Costa, Richard Etter, Tom Broens, “A Rule-Based Approach towards Context-Aware User Notification Services”, 1-4244-0237-9/06, 2017.
6. Palanivel Kodeswaran, Vikrant Nandakumar, Shalini Kapoor, Pavan Kamaraju, Anupam Joshi, Sougata Mukherjea, “Securing Enterprise Data on Smartphones using Run Time Information Flow Control”, IEEE2016.
7. Sokol Kosta, Andrius Aucinas, Pan Hui, Richard Mortier, Xinwen Zhang, “ThinkAir: Dynamic resource allocation and parallel execution in the cloud for mobile code offloading”, IEEE2018.
8. Khandaker Mustakimur Rahman, T.Alam, M.Chowdhury, “Location based early disaster warning and evacuation system on

mobile phones using Open Street Map", IEEE2016.

9. Archana Gupta, Mohammed Abdul Qadeer, Sandeep Kumar LocationBased Services using Android, 978-1-4244-4793-0/09, 2009IEEE.

10. J Charles Finny Joseph, R Dinesh Kumar, M Shubin Aldo, "AlertSystem for Fishermen Crossing Border using Android", International Conference on Electrical, Electronics and optimization Techniques(ICEEOT)-2016.

11. Khandaker Mustakimur Rahman, T.Alam, M.Chowdhury, "Locationbased early disaster warning and evacuation system on mobile phones using Open Street Map", IEEE2016.

12. Majid A. Al-Taee, Nabeel A. Al-Saber, Omar B. Khader, "Remote Monitoring of Vehicle Diagnostics and Location Using a Smart Box with Global Positioning System and General Packet Radio Service", 1- 4244-1031-2 /07, 2007 IEEE.

13. Palanivel Kodeswaran, Vikrant Nandakumar, Shalini Kapoor, Pavan Kamaraju, Anupam Joshi, Sougata Mukherjea, "Securing Enterprise Dataon Smartphones using Run Time Information Flow Control", IEEE2016

A Wearable Lora – Based Emergency System for the Safety Monitoring

[1] A Mr.A.Palanisamy, [2]M.Hareesh kumar, [3]M.Keerthana, [4]L.Sona, [5]A.Tamilselvan
[1] Associate Professor, Department of Electronics and Communication Engineering, Nandha College of Technology.
[2,3,4,5] UG Scholar, Department of Electronics and Communication Engineering, Nandha College of Technology.

Abstract - In this paper we are designing a wearable monitoring device, a safety measure for underground mining workers. In this project, the system is built using different sensors used to monitor both surrounding and health parameters and drives all the sensed parameters/values to the ESP 32 module. The values then transmitted by using Lo-Ra a spread spectrum modulation technique. If any critical situation is detected an alert will be given by the system. The values detected will be displayed on the connected device which will be easier for the control center to monitor and take the instantaneous actions to prevent severe damage.

Key words: Tilt Sensor, Vibration Sensor, ESP 32, mining Safety Systems.

INTRODUCTION

Safety is an essential factor for all the workers in an industry. Underground mining industries comes under this category, where parameters such as poisonous gases, fire accidents, high temperature are important measures, and it has to be monitored regularly. Every mining industry follows some basic safety precautions, to avoid acccidents. In this paper we are considering the above mentioned situations and also monitoring the health conditions of the mining workers.

Using Radio Communication inside the underground mines has some drawbacks. Therefore wireless communication is much suitable for fast,accurate,flexible and production method for underground mines.

So we are using Lo-Ra which has Low Power characteristics it can be used for long range communication.

This system is panned by considering all the important factors i.e. it can measure temperature, blood pressure, fire gas, humidity,and detects earthquake, landslides. Thus the intended system is a perfect solution for most difficulties faced by mine workers. An efficient communication system must be set between the mining workers and the mining control room. Using wired system is inefficient in underground mines. Thus we are selecting this wearable wirless monitoring device that enables the sensed data into connected device such as Mobile Phones or Laptop.

EXPLANATION OF THE SCENARIO

The proposed system is divided into two sections. Firstly is a wearable device that will be attached/tagged to the body of the Mine Workers. The suitable design for this wearable is a safety helmet.

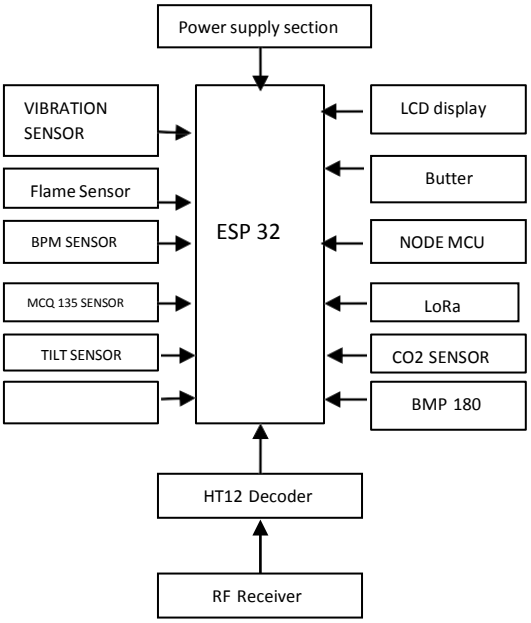

Fig 1 Interfacing Block Representation of Wearable Device.

METHODOLOGY

The proposed sytem consist of a wearable device that is attached to the body of the Mining Worker.The device is built with multiple sensors that process real-time parameters such as poisonous gases,humidity, Body Temperature, Heart Rate and detects earthquake. We are using ESP 32 which can interface with other systems to provide LoRa functions. If a humidity level exceeds the pre-programmed level,it send an alert. Likewise CO2 sensor sends an alert message if the oxygen evel is decreased. The vibration sensor senses the vibration before an earthquake and alerts the control room. Flame senor is stopping fire accidents and rapidly spreading by detecting fire and feed alrt to main station. Lo-Ra transmits all the data to the display of the connected device.

HARDWARE DESCRIPTION

A. SENSOR

1) Temperature Sensor (LM35):

A Linear LM35 is used to record temperature at constant interval of time. It is an accurate temperature sensor with an output voltage linearly proportional to Centigrade temperature. The analog voltage to digital sample data conversion is handled by LPC2148 and the obtained digital value will be sent on the LCD display connected to LPC 2148.

2) MEMS Accelerometers (ADXL335):

The ADXL335 is a low power whole 3- axis accelerometer with signal conditioned voltage outputs. Product processes acceleration with a minimum full-scale range of ±3 g. This sensors can measure the static acceleration of gravity in tilt- sensing device, and also as dynamic acceleration consequential from vibration, shock, or motion. X-axis is connected with controller and continuously checks that “g‟ value change.

3) Humidity Sensor:

This sensor will give analog outputproportional to relative humidity, the amount of water vapor in the air. The humidity sensor HSM-20G is of resistive type. It is an analog humidity and temperature sensor that outputs analog voltage respects to relative humidity and temperature

4) Fire sensor:

Fire sensor will sense heat radiations in surroundings. The sensor is used to detect any trace of fire and it will give interrupt signal as soon as it detects Fire in underground regions. It works on the principle of IR rays or Heat radiation detection.

5) MQ-4 Semiconductor Sensor for Natural Gas

For detection of most natural gases like Methane, also to Propane and Butane which are the major toxic gases in underground coal mines this gas sensor
interfaced. It has 6 pins; 4 of them are used to bring signals and other 2 are used for supplying heating current.

6) Light sensor (LDR):

. Light sensor helps in setting PWM controlled torch lamp, which senses depending on the light intensity. If the working area is dark then LDR activated circuit will turn ON the torch lamp arranged to wearable device. PWM usage
helps the system to have good battery backup.

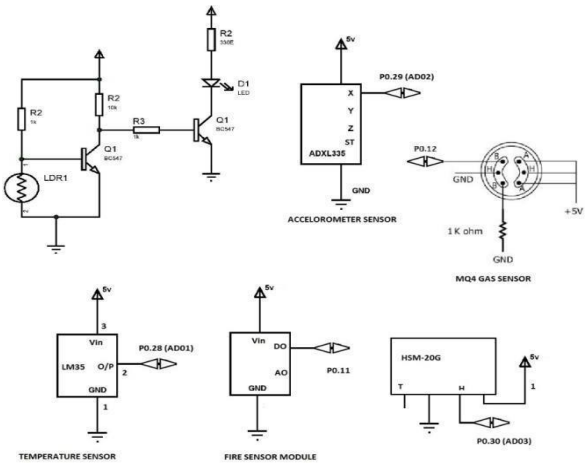

7) TILT Sensor

Tilt sensor measures the tilting position with reference to gravity. they enable the easy detection of orientation or inclination.

8) Accelerometer Sensor

This **device** measures the vibration or acceleration of motion of a structure. A transducer converts these vibrations into electrical current by using the piezoelectric effect.

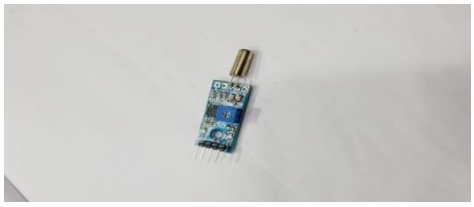

Fig 3. Accelerometer Sensor

9) CO2 Sensor

A CO2 sensor measures gaseous co2 levels by monitoring the amount of infrared radition absorbed by co2 molecule. It measures in parts- per- million(ppm) and reported in units of micromol.

10) BPM Sensor

The heartbeat sensor measures the heart rate in Beats per Minute using an optical LED source and an LED light sensor.

Fig 4. BPM Sensor

11) BMP 180

BMP 180 sensor is used to measure the barometric or Atmospheric pressure. It is a high precision sensor. The Barometric Pressure is the weight if air applied on everything.

12) LoRa

LoRa can be used to enable data communication over a long range while using very little power.

Fig 5. LoRa

14) DHT 11

It is a basic, ultra low-cost digital temperature and humidity sensor. It uses a capacitive humidity sensor and thermistor to measure the surounding air

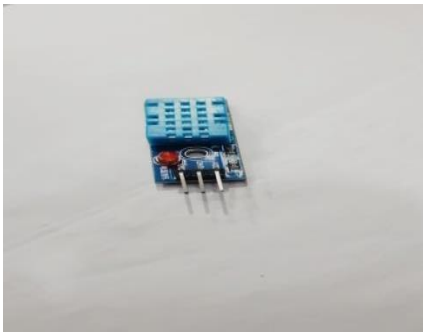

Fig 6. DHT 11

B) ESP32 MODULE

The updating web data through ESP32 modem when interfaced with microcontroller or PC is much simpler as compared with Ethernet module since ESP is a SoC and Integrated TCP/IP protocol stack. AT firmware is provided with easy to use command set with which it can be configured or operated at various Baud Rate (Supported 9600, 115200 or 57600). Plain Text may be sent through the modem by interfacing only three signals of the serial interface of modem with microcontroller (TxD, RxD and GND).

In this scheme RTS and CTS signals of serial port interface of modem with microcontroller (TxD, RxD and GND). In this scheme RTS and CTS signals of serial port interface of ESP Modem are connected with one another. The transmit signal of serial port of microcontroller is connected with of the serial interface receive signal (RxD) of ESP Modem while receive signal of microcontroller serial port is connected with transmit signal (TxD) of serial interface of ESP Modem.

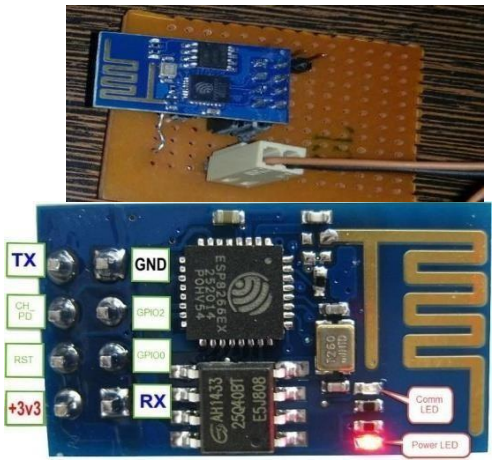

C. LCD INTERFACING

Here we have interfaced a character based 16x2 LCD for displaying information regarding different parameters like Temperature, Humidity etc.

Fig 5 LCD with Sensor Information

II. SOFTWARE DESCRIPTION

The core firmware is developed for Bare Metal microcontroller and flashed to internal rom. Firmware is written Embedded C language. And whole project is designed keil product development tools such as keil IDE, armcc cross-compiler for ARM controllers. Phillips Flash loader for burning firmware to ROM. HyperTerminal used as serial port client for purpose of debugging hard-software effectively.

A) About Keil IDE

Keil is free software that solves many of the pain points for an embedded programmer. This is an integrated development environment

(IDE) software that integrated a text editor to write, a compiler to compile it and convert source code to hex files

B) About HyperTerminal

The HyperTerminal tool is used to monitor Serial Ports in PC. Terminal software is mainly used for initial setup of LoRa module, i.e. to update setting or updating AT firmware for ESP module provided from manufacture. It also helpful in debugging the functionalities of

prototype of our project. Thus at the Remote station the collected data from LoRa Receive is displayed as mentioned in the Results section.

III. RESULTS

A) PROTOTYPE PICTURES

The Overall systems results are given in this section. The LPC2148 Evolution Board which is shown in below figure is heart of all functionalities in miner module i.e. Monitoring, Processing collected data and taking necessary action based on the limits given for individual sensors.

Fig 6 LPC2148 Evolution Board

In the following Figure all sensors and modules are connected to form the first prototype of our proposed system.

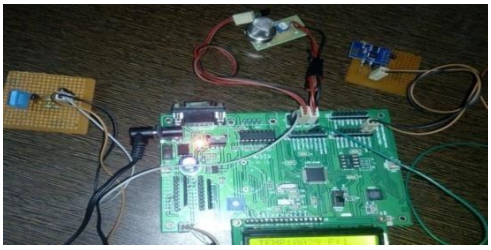

Fig 7 Overall Miners Module Hardware Setup

On detection of Abnormal activity at miner module the core system sends alert based on the Interrupt source. A Fall Status indicates the steadiness of a miner. Various data is also record in regular intervals of time. This enables us to track the real time data at any given instance of time.

B) TEST CASES

The IoT server regularly collects the listed measured parameter and plots on graphs with reference of date they measured. Thingspeaks channel settings can be changed as per figure showed.

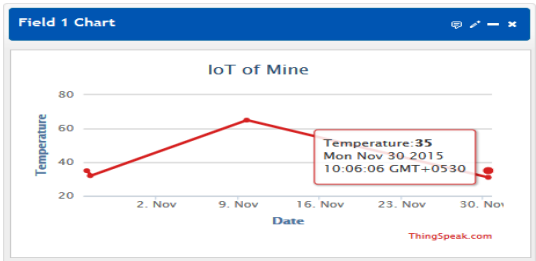

Fig 8 Temperature values plot on graph

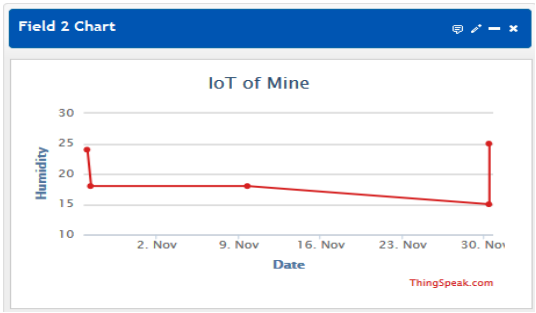

Fig 9 Humidity values plot on graph

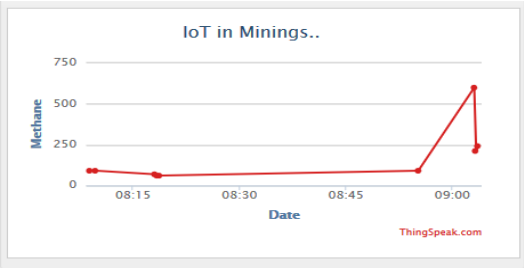

Fig 10 Graph plotting of Gases (Methane)

The above showed graphs reveals time- to-time updates of sensor parameters collected from the ground section nodes. Graph plotting of data easy in analyzing and monitoring. This data is displayed in pc that provides the ompleteinformation of workers and statistics of all the parameters. The parameters log data can also be cleared to refresh unwanted overhead of maintaining huge data in the server as showed with listed options. Additional options enable to delete channelif unwanted.

CONCLUSION

The present underground mining workers can use this safety monitoring sysem proposed in this paper. Since this system is made of Lo-Ra which uses low power, so the proportion of power consumption is lowered. It will help in the efficient and effective manner.

REFERENCES:

1)Ankit Singh, Upendra Kumar Singh, "IoT in Mining for Sensing Monitoring and rediction of Underground Mines Roof Support", IEEE, 2018.

2) Boddapati, Pakirabad, " Design of lot Based Coal Mine Safety System Using Nodemcu", ISSN, vol 8, Issue 6, 2019.

3) Bonala Ashwini , D.Ravi Kiran Babu, " IoT Based Coal Mine Safety Monitoring and Control Automation", IOSR–JCE, vol 20, Issue 6,21-2-2018.

4) S.R.Deokar, J.S.Wakode, " Coal Mine Safety Monitoring and Alerting System", IRJET, vol 4, Issue 3, pp 2146-2149, 2017.

5)K.Hari Prasad, Kannappan.a, "Zigbee Based Intelligent Helmet for Coal Miners Safety Purpose", IJITE, vol 6, Issue 12, pp403-406, 2016.

An Automated system for regular monitoring of people to adopt safety guidelines to avoid COVID19 using Deep Convolution Neural Network Model

[1] Dr. R. Jayanthi,[2]K. Keerthana, [3]K. Jayameena,[4]T.P. Karthikeyan, [5]A. Karthikeyan
[1] 1Professor and Department of Electronics and Communication Engineering, Nandha college of technology
[2,3,4,5] UG Scholar, Electronics and Communication Engineering, Nandha college of technology

Abstract - The Corona virus which is currently threatening in the world, originated in the province of Wuhan on the China continent. Electronics and Communication Engineering, Covid-19 is a Corona Virus family that spreads very fast and easily. Although many countries have worked together to find a vaccine for the Covid-19, it has not been fully effective. So, we have to follow a few ways to protect ourselves from the social distance, wearing mask, washing and sanitizing hand. In this paper helps to diagnose the symptoms of the most common Covid-19 in this world without being touched by technological advances i.e., fever, cough, sneezing. In deep Convolution Neural Network (CNN) are implemented to monitoring. This monitoring is spontaneously monitored and recorded in difference places and people to adopt safety guidelines to avoid Covid-19. Thus helps to people fight against Covid-19 and protect them from it.

Key words: RFID, Fever, Mask detection, Temperature.

INTRODUCTION

The whole world is now in a dangerous situation, there is no security for life due to Covid-19, and the safety is a primary thing for everyone who comes out for their survival in their life in this Covid- 19 situation. The corona virus originated on the Chinese continent in the province of Wuhan. Although the pyrethrum was discovered six months after its formation, its potency remains ineffective. So, people should follow the following steps toprotect themselves.

i. Avoid social contacts and Keep social distance.
ii. Stay home, if you feel fever
iii. To Avoid sneezing, cough and spitting in open place
iv. Wear mask where you go
v. Sanitizing and washing hand properly

Government, Doctor, lawenforcement agencies, police and many others play a key role in pandemic situation. If any person entering a company or institution has a sign of corona, they can spread it to others by air or touch. Therefore, we are in need of an unmanned monitoring system to solve this problem. This cannot be easily controlled by the government so the intelligentsystem Safety of lives here as we can't confirm that all of them are following the safety measures or not.

While workers entering into the office, the system checks their body temperature, provides sanitizers to keep them clean, detects the face masks to avoid direct contact and also allows only the staff in to the office by verifying their I'd cards. These process where done with the help of IoT system in four stages namely Fever Detection, Hand Sanitizing, Mask Detection and Tag based Entry. This

system helps to keep the workers safe and secured from the Covid-19 pandemic. This project is very helpful in controlling the corona cases.

Related works of computer vision (CV) in different domain present in this paper are Section 2. Literature Review Section 3. Methodology and components used is given in Section 4. Discussion and Results are analysed Section 5. Conclusion and future scope Section 6. Reference.

LITERATURE REVIEW:

In [1], Hasan, 2019, COVID-19 fever symptom detection based on IoT cloud, Node MCU used to transmit the received data from the to the cloud platform then alert the monitoring management.

In[2]S.N.Kavitha,K.Shahila,S.C.Pr asana Kumar And 2018, An IoT-based framework for early identification and monitoring of Covid-19 cases, The Internet of Things (IoTs) framework is to collect automatically monitors and follows and guides and identifies people with symptoms. The need of a solution is on high demand to get rid of this disaster, as there were many self solutions to overcome this situation like wearing masks, using sanitizers frequently, etc helps us to keep us safe in this situation but, we can't ensure the Real-time symptom data from users to early Covid-19 cases.

In [3], Kumar, Kumar and Shah 2020, Role of IoT to avoid spreading of COVID-19, the use of IoT with smart sensors to measure and record the body temperature of individuals will help to identify the infected.

In [4], E.Yusuf, et.al.,2020, Novel Corona virus disease- Smart Contactless Hand Sanitizer-Dispensing System Using IoT Based Robotics Technology, Smart contactless hand sanitizer-dispensing system using IoT based robotics technology was successfully designed, built up and tested in this project.

METHODOLOGY:

The proposed system consist of two categories as,

a) Monitor
b) Maintain

Monitor is one of the type which judge a person who wear the mask or not Maintain is another type which judge the mask during the working hour in college/office. The RFID is the tag which is used to identify a person who enters the office/college. The RFID based database management system helps us to maintain a proper data base for the person's entry time and exit time in a cabin or room. Ifinfected person is analyses by software they never allow to enter office And then that person get quarantine.

We have proposed our solution to overcome this Covid-19 situation using the IoT system which will ensure the safety of people. We ensure the safety of each and every person who comes out of their homes for their survival on the basis of four stages they are,

1) Temperature Detection
2) Hand Sanitizing
3) Mask Detection
4) Tag based Entry

These four stages of entry help the people to have a normal life outside the premises, without any from infection the dangerous corona virus.

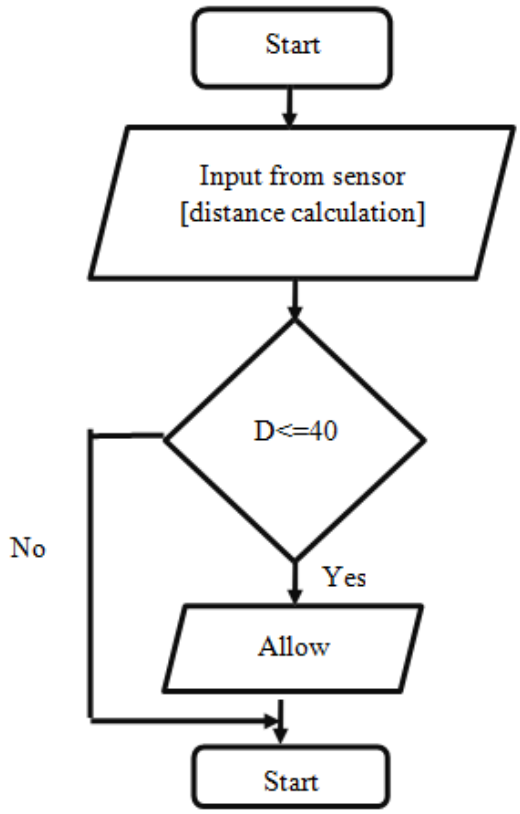

Fig 1: Flow chart for our proposed work to control COVID-19 pandemic by monitoring of human activities.

TABLE 1: The categories in the Controlled COVID-19 dataset along with the number of images divided into train and test datasets.

Label	Category	Train	Test
0	Coughing	880	176
1	No social distance	760	152
2	With gloves	785	157
3	Handshaking	865	173
4	Without gloves	1015	203
5	With mask	830	166
6	No handshaking	1105	221
7	Spitting	700	140
8	Social distance	845	169
9	Hugging	735	147
10	Without mask	705	141
11	Sneezing	675	135

BLOCK DIAGRAM:

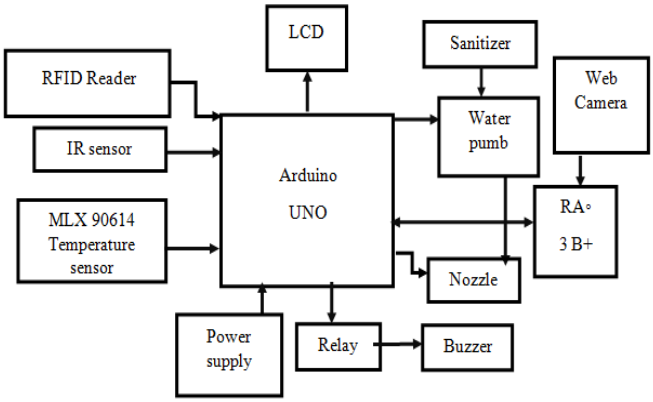

Fig 1: Block Diagram for the Analysis of COVID-19 for the healthcare system.

The thermal camera is used, that visualizes the body temperature as an image and the temperature at multiple points over a certain region can be measured. In this category was high alert and keep keeping distance from are informed to test the person for the possibility of having COVID- 19.

IR Sensor: There are different types of infrared transmitters depending on their wavelengths, output power and response time. An IR sensor consists of an IR LED and an IR Photodiode; together they are called as Photo coupler or opto coupler. Infrared receivers or infrared sensors detect the radiation from an IR transmitter. IR receivers come in the form of photodiodes and phototransistors. Infrared Photodiodes are different from normal photo diodes as they detect only infrared radiation.

Temperature Sensormlx90614: The IR Thermometer Evaluation Board is equipped with an MLX90614-ABB -- a simple-to- use, but very powerful single-zone infrared thermometer, capable of sensing object temperatures between -70 and 380°C. Using SMBus -- an I2C-like interface -- to communicate with the chip means youonly need to devote two wires from your microcontroller to interface with it.

Arduino: Arduino is an open-source electronics platform based on easy-to-use hardware and software. Arduino boards are able to read inputs - light on a sensor, a finger on a button, or a Twitter message - and turn it into an output - activating a motor, turning on an LED, publishing something online. You can tell your board what to do by sending a set of instructions to the microcontroller on the board.

Fig: Arduino Uno Microcontroller

Raspberry pi3+: The Raspberry Pi is a low cost, credit-card sized computer that plugs into a computer monitor or TV, and uses a standard keyboard and mouse. It is a capable little device that enables people of all ages to explore computing, and to learn how to program in languages like Scratch and Python.

RFID: Radio Frequency Identification (RFID) technology uses radio waves to identify people or objects. There is a device that reads information contained in a wireless device or "tag" from a distance without making any physical contact or requiring a line of sight.

Fig: RFID Scanner

Sanitizer: Often used on the go, hand sanitizers contain ethyl alcohol, isopropyl alcohol or both to kill bacteria and viruses on your hands. Alcohols have long been known to kill germs by denaturing the protective outer proteins of microbes and dissolving their membranes.

Relay: Relay works on the principle of electromagnetic induction. When the electromagnet is applied with some current it induces a magnetic field around it. Above image shows working of the relay. A switch is used to apply DC current to the load.

RESULT

The outcome of this paper is monitoring people who can survive themselves through detection. It is immensely workout the entire world. The data based monitoring system will clearly identify the employer's temperature level which helps us to social distance. The stages which are highly recommended to follow and will be monitor through the processing management.

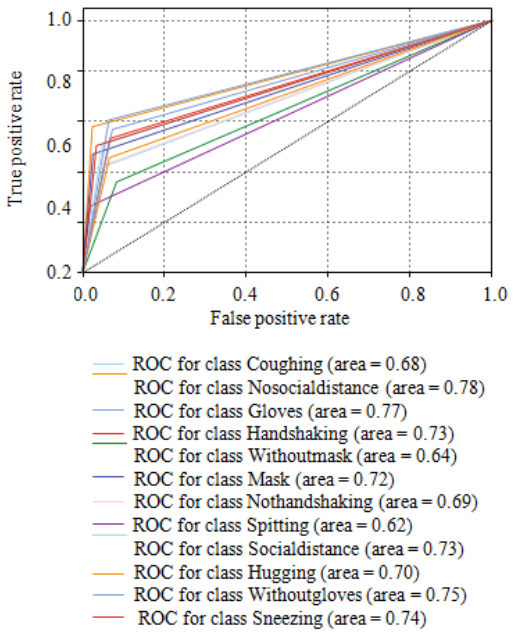

Fig: ROC curve in LeNet

CONCLUSION:

This Covid19 pandemic shows various difficulties faced by the people and its utmost survival for the day to day life. The process that is done by loT system which ensures the safety measures of people in the world. With the help of monitoring system people can secure them with fearlessly. The detection based networks highly enlightened in loT system. Within these, we get clear identification of people who are suffering through covid19. Through RFID based tag system, it will the database and monitor each database of the employers. Self solutions were instructed along with these kinds of measurements

like usage of detection in daily basis of life. A short alert message will be given to those who are not aware of wearing a mask. Some hardware tools or materials which we used to found out the temperature of the employers.

REFERENCE

[1] Altun.O and Nooruldeen.O, "SKETRACK: stroke-based rec- ognition of online hand-drawn sketches of arrow-connected diagrams and digital logic circuit diagrams," Scientific Pro- gramming, vol. 2019, Article ID 6501264, 17 pages, 2019.

[2] Antonijevic.M, Zivkovic.M, Arsic.S, and Jevremovic.A, "Using AI-based classification techniques to process EEG data collected during the visual short- term memory assessment," Journal of Sensors, vol. 2020, Article ID 8767865, 12 pages, 2020.

[3] Alotaiby T.N, Alrshoud S.R, Alshebeili S.A, and Alja L.M- far, "ECG-based subject identification using statistical features and random forest," Journal of Sensors, vol. 2019, Article ID 6751932, 13 pages, 2019.

[4] Bai B, Zhong B, Ouyang G et al., "Kernel correlation filters for visual tracking with adaptive fusion of heterogeneous cues," Neurocomputing, vol. 286, pp. 109–120, 2018.

[5] Cai.L, Ge.W, Zhu.Z, Zhao.X, and Z. Li, "Data Analysis and Accuracy Evaluation of a Continuous Glucose- Monitoring Device," Journal of Sensors, vol. 2019, Article ID 4896862, 8 pages, 2019.

[6] Chithra R.S and Jagatheeswari.P, "Severity Detection and Infection Level Identification of Tuberculosis Using Deep Learning," International Journal of Imaging Systems and Tech- nology, 2020

[7] Hu.J, Abubakar.S, Liu.S, Dai.X, Yang.G, and H. Sha, "Near- infrared road-marking detection based on a modified faster regional convolutional neural network," Journal of Sensors, vol. 2019, Article ID 7174602, 11 pages, 2019.

[8] Lecun.Y, Bottou.L, Bengio.Y, and Haffner.P, "Gradient- based learning applied to document recognition," Proceedings of the IEEE, vol. 86, no. 11, pp. 2278–2324, 1998

[9] Qin.Z.Z, Sander.M.S, Rai.B et al., "Using artificial intelli- gence to read chest radiographs for tuberculosis detection: a multi-site evaluation of the diagnostic accuracy of three deep learning systems," Scientific Reports, vol. 9, no. 1, article 15000, 2019.

[10] Samuel.R.D.J and Kanna.B.R, "Tuberculosis (TB) detection system using deep neural networks," Neural Computing and Applications, vol. 31, no. 5, pp. 1533–1545, 2019.

[11] Tan.X, Zou.M, and He.X, "Target recognition in SAR images based on multiresolution representations with 2d canonical correlation analysis," Scientific Programming, vol. 2020, Article ID 7380790, 9 pages, 2020.

[12] Uddin.M.I, Zada.N, Aziz.F et al., "Prediction of future ter- rorist activities using deep neural networks," Complexity, vol. 2020, Article ID 1373087, 16 pages, 2020.

[13] Vijayalakshmi.A and Rajesh Kanna.B, "Deep Learning Approach to Detect Malaria from Microscopic Images," Mul- timedia Tools and Applications, vol. 79, no. 21, 2019.

[14] Wang.C, HorbyP.W, Hayden.F.G, an Gao.G.F, "A novel coronavirus outbreak of global health concern," The Lancet, vol. 395, no. 10223, pp. 470–473, 2020

[15] Zhu F, Li. X, Tang et al.., "Machine learning for the prelim- inary diagnosis of dementia," Scientific Programming, vol. 2020, Article ID 5629090, 10 pages, 2020.

An Effective Method for Smart Farming by Agri-Bot Using Embedded System

[1] D.Baskaran1 ,[2]V.Ajaykumar ,[3]S.Bharath kumar, [4]C.Govarthanan, [5]E.Vinoth kumar
[1] Assistant professor, Department of Electronics and Communication Engineering, Nandha college of Technology.
[2,3,4,5] UG scholar, Electronics and Communication Engineering, Nandha college of Technology

Abstract - The Corona virus which is currently threatening in the world, originated in the province of Wuhan on the China continent. Electronics and Communication Engineering, Covid-19 is a Corona Virus family that spreads very fast and easily. Although many countries have worked together to find a vaccine for the Covid-19, it has not been fully effective. So, we have to follow a few ways to protect ourselves from the social distance, wearing mask, washing and sanitizing hand. In this paper helps to diagnose the symptoms of the most common Covid-19 in this world without being touched by technological advances i.e., fever, cough, sneezing. In deep Convolution Neural Network (CNN) are implemented to monitoring. This monitoring is spontaneously monitored and recorded in difference places and people to adopt safety guidelines to avoid Covid-19. Thus helps to people fight against Covid-19 and protect them from it.

Key words: Agro-bot, Farming, ploughing, Seed sower, Mud leveller, pesticide sprayer.

INTRODUCTION

In agriculture the application of robotics technology is very new. The robot can perform agricultural operations autonomous such as ploughing, seed sowing, mud leveler, pesticide sprayer and weed cutter. Seed sowing process is done by man power alone. After the evaluation in modern agriculture the ploughing, seed sowing, mud leveler and pesticide sprayer are in a separate manner. This type of mechanism requires heavy load and it consumes more cost and also it cause more time to do all these.

The applications of instrumental robotics in every field is spreading every day to cover further domain, as the opportunity of replacing human operator provides effective solution. This is especially important when the duties, that needs to be performed, are potentially harmful for the safety of workers, or when more conservative issue are granted by robotics.

LITERATURE REVIEW

In [3], a review of the different types of agri bots which are already available is discussed.An image processing algorithm is used to detect the obstacles in the path of robot arm. Different techniques to send commands to the bot carry out functions especially the DTMF technique for long range is also discussed.

In [5], the authors have discussed about automatic ploughing, seeding, fertilizing and watering mechanisms. The automatic seeding and fertilizing is done by solenoid. Soil moisture sensor is used for automatic watering application using Raspberry pi and internet.

In [1], purpose is to develop a fully autonomous agri-bot for agricultural applications. GPS technology is used to locate robot in the field; Ultrasound sensor is used for obstacle avoidance, LPC arm controller and battery management system is used that drives the geared DC motors using skid steering mechanism.

In[2], developing an automatic drip irrigation system based on GSM was the main focus of this paper. The system uses several sensors to obtain the status of the field and the irrigation schedule is based on this data; Micro controller and App/DTMF is used for control and communication respectively.

In[4], the focus is to develop a robot for all agricultural tasks like ploughing, seed dispensing, fruit picking and pesticide spraying while also provide option for manual control. The system unit has developed using ATmega controller. Ultrasonic sensor is used for navigation in the field; Outside communication is through Bluetooth and GSM network; Camera and image processing is used for fruit picking and weeding.

Existing system:

The existing system results in which increases the soil density and heavy load on agricultural land. Seed drill is a device that sows the seed for crops by metering out the individual seeds,positioning them to the soil, and covering them to certain average depth. Thus all the process leads to waste of time and also the wastage of seeds. Here it uses fuel as an energy sources and while pesticide spraying man power was used which cause loss in energy and also increases the labour cost. During seeding there was a wastage of seeds and heavy vehicles like tractors were used for ploughing and mud leveling process.

DISADVANTAGE:

- ✓ High carbon emission
- ✓ Huge investment and running cost
- ✓ It destroys soil structure
- ✓ It causes soil erosion.

PROPOSED SYSTEM:

Our proposed system aims to construct a robotic vehicle which is controlled through mobile application. A DC motor operated at 12v battery for power supply and also we use an solar panel which is used to convert solar energy into electrical energy. The power is transmitted at wheel through the gear devices. It uses both mechanical and electronic method to share their power efficiency. This robot contains five operations in single machine.

There are ploughing, seed sowing, mud leveling, pesticide sprayer and weed cutting. These were monitored using a camera from a mobile.

METHODOLOGY:

With the development of technology, many automatic monitoring system has been proposed. A robot which is used for the process of agriculture which includes ploughing, seed sowing, mud leveller, pesticide sprayer, and a weed cutter, which is used to cut the unwanted plants or weeds in the agricultural field. The system works under the battery and controlled by blink.

The four wheels are connected in a base frame of the robot and driven the rear wheel is dc motor. Harrow is fitted to till the soil in the one end of the frame. For storing seeds and seed flow the funnel is used. It is made up of plastic. The drilled hole in the funnel is used for spread the seeds to the digged soil. Another end level is used for close the seeds to the soil.

The infrared camera is used to detect the unwanted weeds in the field through image processing and those are removed using weed cutter, Here the robot is operated through the battery which also gets energy from the solar panel which is used to convert the solar energy into electrical energy. Then the ploughing module plough or dig the soil then by using the gear module the seed sowing module sows the seed which reduces the wastage of seeds, then the Mud leveler which levels the soil after the sowing of seeds, at last the pesticide was sprayed through the spraying module with the help of pressure pump module. All these were monitored through the camera and it was controlled by blink through mobile.

BLOCK DIAGRAM:

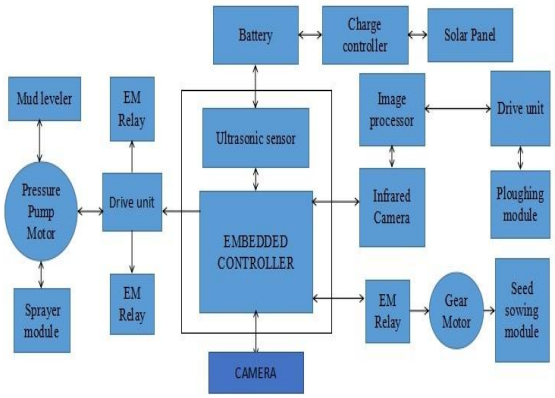

Fig. Block diagram

HARDWARE AND SOFTWARE:

Embedded controller:

The embedded controller is a micro controller in computers that handle various system tasks that the operating system does not handle.Here the Embedded controller used is a MCU8266 which is an open source software and hardware development that is built around a very inexpensive System-on-a-Chip(SoC).

Fig.Embedded controller

Ultrasonic sensor:

An Ultrasonic sensor is an electronic device that measures the distance of a target object by emitting ultrasonic sound waves, and converts the reflected sound in to an electrical signal.

Fig. Ultrasonic sensor

EM Relay:
A relay is a electromagnetic switch operated by a relatively small electric current that can turn on or off a much larger electric current.

Gear motor:
It is an combination of an electric motor and a gear box. It produces high torque because it combines a motor with a gear reducer system.

Drive unit:
The robot's capacity to move it's body, arm, and wrist is provided by the drive system used to power the robot.

Infrared camera:
It is a non contact temperature measurement device which used to identify the weeds in the field.

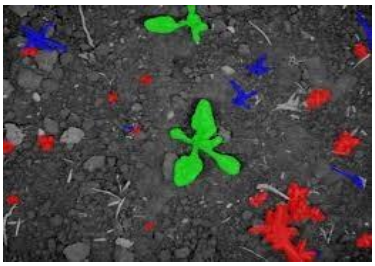

Fig. UV image of the field

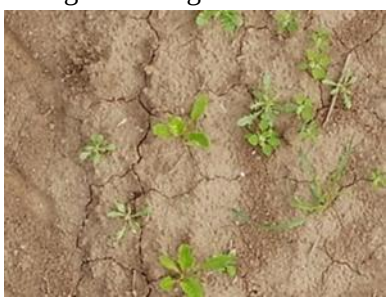

Fig. Normal image of field

EM Relay:
A relay is a electromagnetic switch operated by a relatively small electric current that can turn on or off a much larger electric current.

Gear motor:
It is an combination of an electric motor and a gear box. It produces high torque because it combines a motor with a gear reducer system.

Fig. Gear motor

Camera:
A 360 degree camera is used, which enables us to monitor everything around the robot.

Fig. Camera

Cultivating operation:
It is a teeth like structure that are used to break soil and invert furrow slice to control weeds.

Fig. Ploughing tool

Seed sowing module:
It consist of seeds in seed drum, without wastage of seeds, the seeds were dropped into the soil with the help of funnel like structure.

Fig. Seed sower

Mud leveler:

It works of leveling and closing the mud. The plate used here closes the after the sowing of seeds.

Fig. Mud leveler

Sprayer:

The water pump is used to spray the pesticides to the crops from the pesticide container.

Fig. Pesticide sprayer

Weed cutter:

It consist of blades which is used to cut the weeds in the field which are detected by using infrared camera.

BLYNK app:

Blynk is a hardware agnostic IoT platform with white-label mobile apps, private clouds, device management, data analytics, and machine learning. Blynk is a hardware-agnostic IoT platform with white-label mobile apps, private clouds, device management, data analytics, and machine learning. The software used here is KLC software.

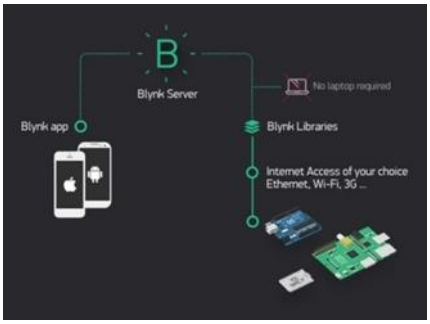

Fig. BLYNK APP

CONCLUSION:

This paper is an idea of automated Agri-bot which is navigated through the field. The crop production may be done better and cheaper with a use of small machines.

One of the advantages of the small machine is that they may be more acceptable to the non-farm community. The job in agriculture are a drag, dangerous, require intelligence and quick, through highly repetitive decision hence robots can be rightly substitute with human operator. In a nutshell, it is provided that system works as desired according to the functional requirements. Extension of this system to be adapted in field will definitely help combat the problems faced by the farmers in the field.

FUTURE SCOPE:

Mechanical structures can be modified and rectified of present structure for more precise system testing.

Encoders used can be of more resolution and precision so that they can be used to make the system more precise.

GUI can be made user friendly. Or a phone application can be developed for easy phone interface.

REFERENCES:

[1] Inamdar, D., et al., (2016), "Automated Drip Irrigation System based on Embedded System and GSM Network", International Journal of Innovative Research in Computer and Communication Engineering (An ISO 3297: 2007 Certified Organization) Vol. 4, Issue 5, May 2016.

[2] Lalwani, A., et al., 2015, December, "A Review: Autonomous Agribot For Smart Farming", Proceedings of 46th IRF International Conference, 27th December 2015, Pune, India.

[3]. Durmus, H., Gunes, E.O., Kirci, M. and Ustundag, B.B., 2015, July."The design of general purpose autonomous agricultural mobile robot:"AGRIBOT"", In Agro-Geoinformatics(Agro - geoinformatics),2015 Fourth international conference on (pp. 49-53).IEEE.

[4] Praveena, R. and Srimeena, R., 2015, July. "Agricultural Robot for automatic ploughing and seeding", In Technological Innovation in ICT for Agriculture and Rural Development (TIAR), 2015 IEEE (pp. 17-23). IEEE.

[5] Gollakota, A. and Srinivas, M.B., (2011), December. "Agribot a Multi purpose agricultural robot", In India Conference (INDICON), 2011 Annual IEEE (pp. 1-4). IEEE.

[6] Bowden.O, "Design of a lightweight, modular robotic vehicle for the sustainable intensifification of broadacre agriculture," Master's thesis, Queensland University of Technology, 2015.

[7]. Bontsema. J, J. Hemming, E. P. W.Saeys, Y. Edan, A. Shapiro, M.Hoˇcevar, T. Hellstr¨om, R. Oberti, M. Armada, H. Ulbrich, J. Baur, B. Debilde,
S. Best, S. Evain, A. M¨unzenmaier, and O. Ringdahl, "CROPS: high tech agricultural robots," in International Conference of Agricultural Engineering, 2014, 6–10.

[8]. Bulanon. D and T. Kataoka, "Fruit detection system and an end effector for robotic harvesting of Fuji apples," Agricultural Engineering International: CIGR Journal, 12(1), 2010.

[9]. Chwa. D, "Fuzzy adaptive tracking control of wheeled mobile robots with state-dependent kinematic and dynamic disturbances," IEEE Trans. Fuzzy Syst., 20(2), 2012, 587–593.

[10]. De-An. Z, L. Jidong, J. Wei, Z. Ying, and C. Yu, "Design and control of an apple harvesting robot," Bio systems engineering, 2011.

[11]. Haug. S, A. Michaels, P. Biber, and J. Ostermann, "Plant classifification system for crop/weed discrimination without segmentation," in IEEE Winter Conference on Applications of Computer Vision, 2014.

[12]. Hayashi . S, K. Shigemitsu, S. Yamamoto, K. Kobayashi, Y. Kohno, J. Kamata, and M. Kurita, "Evaluation of a strawberry-harvesting robot in a fifield test," Bio systems Engineering, 105(2), 2010, 160–171.

[13]. Hemming.J , C. Bac, B. van Tuijl,
R. Barth, J. Bontsema, E. Pekkeriet, and
E. van Henten, "A robot for harvesting sweet-pepper in greenhouses," in Proceedings of the International Conference of Agricultural Engineering, Jul. 2014.

[14].International Journal of Intellectual Advancements and Research in Engineering Computations, Volume-8- Issue-2, ISSN:2348-2079. "Smart tools for modern agriculture using embedded system".

[15] International Journal for Science and Advance Research In Technology IJSART - Volume 5 Issue 11 –NOVEMBER 2019, "Experimental Validation of Smart Farming Tool For Modern Agriculture"

[16] Kapach. K, E. Barnea, R. Mairon, Y. Edan, and O. Shahar, "Computer vision for fruit harvesting robots: state of the art and challenges ahead," International Journal of Computational Vision and Robotics, 3, 2012, 4–34.

[17] Lehnert. C, A. English, C. McCool, A. Tow, and T. Perez, "Autonomous sweet pepper harvesting for protected cropping systems," IEEE Robotics and Automation Letters, 2017.

[18]. LeCunn. Y, Y. Bengio, and G.Hinton, "Deep learning," Nature, 2015, 436444.

[19].Mehta . S and T. Burks, "Vision-based control of robotic manipulator for citrus harvesting," Computers and Electronics in Agriculture, 102, 2014, 146–158.

[20]. Martins .F.N, W. C. Celeste, R. Carelli, M. Sarcinelli-Filho, and T. F. Bastos-Filho, "An adaptive dynamic controller for autonomous mobile robot trajectory tracking," Control Eng. Pract., 16(11), 2008, 13541–1363.

[21]. Szeged. C, V. Vanhoucke, S. Ioffe, and S. Shlens, "Rethinking the inception architecture for computer vision,"in arXiv, 2015.

[22]van Henten . E and J. Hemming, "An autonomous robot for harvesting cucumbers in greenhouses," Autonomous Robots, 2002, 241–258.

[23]. Yang.J. M and J.-H. Kim, "Sliding mode control for trajectory tracking of nonholonomic wheeled mobile robots," IEEE Trans. Robot. Autom, 15(3), 1999, 578–587.

An Integrated Solution for High-Risk Maternal and Fetal Monitoring Based On One Dimensional CNN With IoT

P. Vinoth Kumar[1], M. Balaji[2], M. Gopalakrishnan[3], A. Stephy[4], S. Subadharshini[5]
[1] Associate professor, Department of Electronics and Communication Engineering, Nandha College of Technology.
[2,3,4,5] UG scholar, Electronics and Communication Engineering, Nandha College of Technology

Abstract - The fast-modernizing medical field can be developed and utilized with the help of IoT. Our project work approaches to simplify the patients monitoring by our integrated system of IoT sensors, an emergency diagnostic subsystem a smart health analytic system approaches to secure the patients by automatic monitoring and recording of clinical parameters, and treat them if necessary. The maternal and fetal parameters such as blood pressure, temperature, oxygen level, heart rate are monitored and recorded for those who are hospitalized under high risk condition. The sensors assembled to sense specified parameters record them and the sensed information are recorded and saved in cloud environment. The specialized emergency subsystem developed is used to analyze the data with the threshold levels. The features of the parameters recorded are extracted using CNN. Using deep leaning the features are classified and studied for further consultations with the specialists. A quick and instant remedies can be sought out in case of emergencies.

Key words: Artificial intelligence, CNN, Think speak algorithm, emergency subsystem, feature extraction, patient monitoring.

INTRODUCTION

Every today's processes can be sophisticated on IoT approach which includes medical systems which is getting more demand along with need of best solution for communication quality, data security and storage/retrieval efficiency, data analysis and artificial intelligence systems for better health care. Here, we adopted IoT for healthcare monitoring of pregnant women and their fetus who are hospitalized at high-risk condition.

Basically, the health parameters of a pregnant women are in quite elevated state comparing to normal body. During labor time or hospitalized condition, the parameters may have the chances of getting raised to an intolerance level. This results in complex situation for both mother and fetus. So, an intensive care and observation should be given for them by continuously monitoring their health parameters and instant treatments should be provided. In earlier practices, the health condition is monitored at certain time and at the time of emergency call after any elevation on clinical parameters which caused delayed analysis of health problems that leads to drastic issues to pregnancy. So, our proposed work of integrated solution attempt to have constant monitor and medical aid system protects the pregnancies efficiently and effectively.

The deep learning technology we use here is convolutional neural network (CNN) for analyzing visual imagery. The process is done by one dimensional CNN which consists of several layers such as convolutional layer,

pooling layer, dropout layer, fully connected layer, activation functions. It helps in processing the date at one dimension and aids in image detection and classification. The artificial intelligence detects the parameter variation and alerts the system. The think speak algorithm we use here helps to save and access data in cloud. The effective sensors support the sensing of assigned parameters.
The data privacy, security, and best accuracy in the proposed work will make it a best choice in medical field.

LITERATURE REVIEW:

The following are the literatures referred for the methodology of the proposed work. At [19], By using Viola-Jones algorithm, SVM classifier and CNN in which Euclidean distance provides high accuracy and better image recognition. At Deep learning: A predictive IoT data analytics method by Ayushi Chahal and 2020, they used deep learning, IoT, machine learning, neural networks, predictive analysis. At a survey on machine learning based intrusion detection system on NSL- KDD datasheet, they used SVM, IDS, DoS, Probe, R2L, U2R.

METHODOLOGY:

The proposed system has a work flow of four steps which includes

- Sensors and devices layer
- Emergency monitoring **subsystem**
- Automatic feature extraction subsystem using CNN
- Prediction subsystem using think speak algorithm

The clinical indicators of mother and fetus are sensed by the sensors and devices layer. The sensors and other devices are embedded in Arduino uno board which provides well-formed support for the storing and saving of data. The sensed data are then transferred to the cloud. The cloud is used to save and access the data when necessary. The wi-fi module we install transfers the data to cloud. The internet gateway established acts as a connectivity between the wi-fi module and the cloud. The cloud data are stored in the mobile application. The flow diagram for our proposed system is given below.

Fig:1 The flow diagram for the proposed integrated solution for healthcare monitoring.

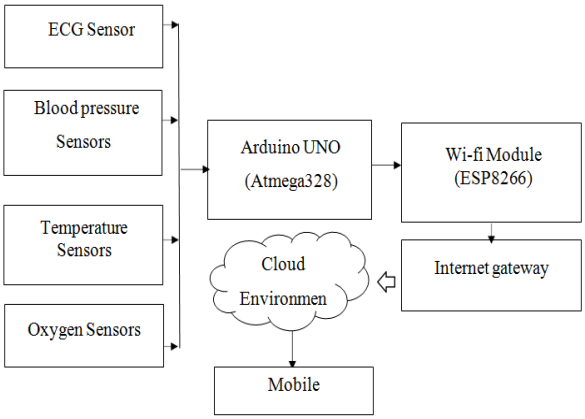

Fig:2; Block diagram for the integrated system with IoT, CNN classifier, with help of artificial intelligence for healthcare monitoring.

SENSORS AND DEVICES LAYER

The sensors we used are assigned for sensing certain parameter such as heart rate of both mother and fetus, temperature, oxygen level and blood pressure of mother. Different types of sensors are used for each type of indications.

ECG Sensor:

The ECG sensor is used to monitor the fetal and mother ECG value. We can measure only Fetal Heart Rate (FHR) before the birth. So, measuring fetal heartrate is an important parameter and which is combined with the mother heartrate. The threshold level is fixed for fetal and mother for getting the classified results.

Temperature Sensor:

The mother body temperature is measured by using temperature sensor for emergency monitoring. Change in temperature for a pregnant-women may affect the fetus. So, we considered temperature is one of the parameters.

Oxygen Sensor:

The pregnancy women inhale higher level air and measuring the oxygen level is one of the key factors in an ambulance. The gas sensor is used here to measure the oxygen level.

Blood Pressure Sensor:

The blood pressure is measured to know the condition of the mother to measure the abnormality.

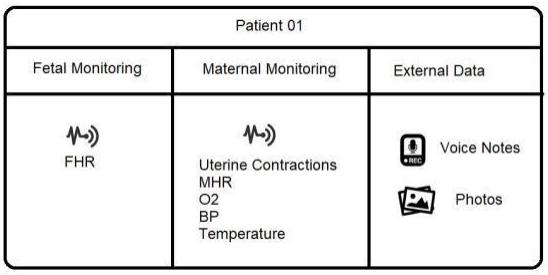

Fig:3; Representation of multiple bio- signals and external non-structured output.

These are mounted on an Arduino Uno board which contains an Atmega328 microcontroller. It has 14 digital pins and 6 analog pins for input/output operations. The sensor module is connected directly with Arduino UNO. It measures the sensor readings and categorizes the ECG, Blood pressure, Oxygen and Temperature. These measured values further uploaded in the cloud.

EMERGENCY MONITORING SUBSYSTEM:

This layer collects data and process them for analysis of health status. The proposed layer is developed with an automatic diagnostic system of clinical signals based on a set of fixed thresholds that are already assigned.

CLASSES FOR THE EMERGENCY SUBSYSTEM OUTPUT

Output	Description
EC1	Fetal Emergency
EC2	Maternal Emergency
EC3	Fetal and Maternal Emergency

TABLE 1:

The above 3 are the classes of diagnostic systems for which intensive monitoring and alert system should be developed.

EMERGENCY THRESHOLD LEVELS FOR THE CLASSES OF DIAGNOSTIC SUBSYSTEM

Clinical Parameter	Threshold	Interpretation	Output
FHR	> 160	Fetal tachycardia	EC1
FHR	> 180	Fetal severe tachycardia	EC1
FHR	< 100	Fetal bradycardia	EC1
FHR	< 80	Fetal severe bradycardia	EC1
MHR	> 100	Maternal tachycardia	EC2
MHR	< 60	Maternal bradycardia	EC2
MO2	< 90	Maternal hypoxemia	EC2
MT	> 37.5	Maternal fever	EC2
MSBP	> 140	Maternal high blood pressure	EC2
MDBP	> 90	Maternal high blood pressure	EC2

TABLE:2

The assigning of each threshold values and the corresponding diagnostic classifications are done based on the international guidelines of the Federation of Gynecologists and Obstetrics (FIGO) for the fetal and maternal parameters.

AUTOMATIC FEATURE EXTRACTION:

The third layer is used to extract the features of sensed parameters that are compared with the threshold level initially set obtained from the above subsystem. For the analysis of the these vital datas, its feature extraction is very important. The FHR interpretation requires a long-term analysis and FHR changes, such as baseline adjustments and long decelerations need several minutes to be confirmed. So, the measures are calculated for the first time after 10 minutes of signal acquisition and updated every 5 minutes, always considering the entire examination.

PREDICTION SUBSYSTEM:

The last prediction system layer is used to evaluate the results for further consultations and treatments for the concerned patient.

PREDICTION CLASSES OF IDENTIFIED SIGNALS

Output	Description
PC1	Fetal and Maternal normal status
PC2	Fetal status suspicious
PC3	Fetal distress
PC4	Maternal status suspicious
PC5	Maternal status harmful
PC6	Fetal and Maternal status harmful

TABLE: 4

The prediction is computed by the use of one dimensional convolutional neural network. It analyses the obtained data and classifies it according to the classes of bio-signals. The set of alternative pooling and convolutional layers provides a clear defined output. To simulate the results Think speak algorithm is effectively used.

The final results classified are given to the specialists for the analysis and required treatments are provided to the concerned patients, if there is any emergency call.

PROPOSED SYSTEM:

Though the system founds best application in healthcare monitoring, the system process is quite complex and expensive. So, in our proposed work we attempt to simplify the complex structure. The work is proposed with

low-cost hardware and accurate measurement of parameters are done with effective layers of CNN.

RESULT:

The final output of the system is extracted, classified and analysed.

PERFORMANCES OF OBTAINED FHR OUTPUTS

Item	Description
1	FHR baseline value
2	Number of FHR baseline changes
3	Instants of FHR baseline changes
4	Number of FHR peaks
5	Instants of FHR peaks
6	Number of FHR minima
7	Instants of FHR minima
8	Number of UC occurrences
9	Instants of UC occurrences
10	Number of DIP-I decelerations
11	Number of DIP-II decelerations
12	Number of Variable decelerations
13	Number of Long decelerations
14	FHR Sample Entropy (20 minutes window)
15	FHR Sample Entropy (5 minutes window)

TABLE:5

For the maternal vital signs monitoring, after considering all the measures, a group of 6 features are selected. The calculation was performed every second, considering the last 5 seconds, with a window of 80% of superposition with the previous calculation with the aim to smoothly monitor changes in maternal health conditions. The 6 statistical measures are: arithmetic mean; standard deviation; median, third quartile; maximum value and minimum value.

All the fetal and maternal selected features were considered as inputs for the CNN prediction subsystem, presented in the following section.

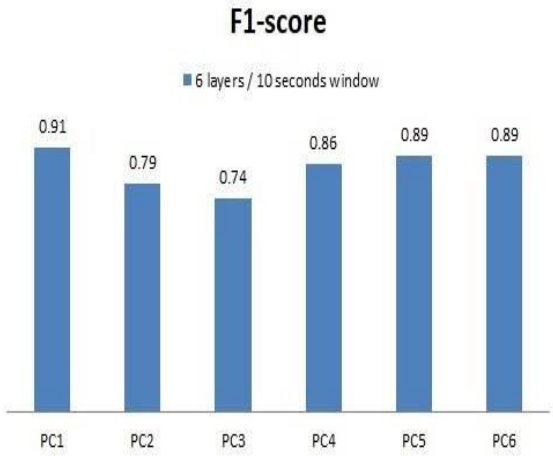

Fig: 4; CNN results for the F1 score for all PC1, PC2, PC3, PC4, PC5, and PC6.

Considering the F1-score as the main criterion, the classification of fetal health status (classes PC2 and PC3) were 0.79 and 0.74, respectively. For the determination of the maternal health status (classes PC4 and PC5) the F1-score was 0.86 and 0.89, respectively. The highest F1-score was 0.91, achieved for class PC1 which indicates maternal and fetal status classified as healthy. Finally, for class PC6, which represents both maternal and fetal as harmful, the F1-score was 0.89. Finally, after evaluating different AI classifiers, four different CNN prediction subsystems were implemented, varying the number of convolutional layers and the window size for submitting data to the network.

A total of 6 classes were considered. The results showed that a one-dimensional CNN with 6 convolutional layers and considering 10 seconds windows achieved the best performance, for the maternal, fetal and both conditions.

CONCLUSION:

An integrated solution of artificial intelligence, IoT and CNN are proposed for the high-risk maternal and fetal monitoring along with

health subsystems. Our work involves less staffing, reduced cost monitoring affordable for all class of patients. The demand of best accuracy, data privacy, communicational capability and handling of data traffic can all be met. The integrated approach results in effective and efficient analysis of health status of mother and fetus. A quick and instant remedies can be sought out in case of emergencies and hence, the risk during labor is reduced and lives are saved.

Future works can be done by using advanced level of CNN and more integrating of circuit.

REFERENCES:

[1] Aloi, G.; Caliciuri, G.; Fortino, G.; Gravina, R.; Pace, P.; Russo, W.; Savaglio, C. "Enabling IoT interoperability through opportunistic smartphone-based mobile gateways" Journal of Network and Computer Applications, 2017, v 81, pp 74-84, doi 10.1016/j.jnca.2016.10.013

[2] Albahri et al.O.S., "Fault-Tolerant mHealth Framework in the Context of IoT-Based Real-Time Wearable Health Data Sensors," in IEEE Access, vol. 7, pp. 50052-50080, 2019, doi: 10.1109/ACCESS.2019.2910411.

[3] Chen M. and Y. Hao, "Label-less Learning for Emotion Cognition," in IEEE Transactions on Neural Networks and Learning Systems, vol. 31, no. 7, pp. 2430-2440, July 2020, doi: 10.1109/TNNLS.2019.2929071.

[4] Chen M , J. Zhou, G. Tao, J. Yang and L. Hu, "Wearable Affective Robot," in IEEE Access, vol. 6, pp. 64766-64776, 2018, doi: 10.1109/ACCESS.2018.2877919.

[5] Chhowa T T, M. A. Rahman, A. K. Paul and R. Ahmmed, "A Narrative Analysis on Deep Learning in IoT based Medical Big Data Analysis with Future Perspectives," 2019 International Conference on Electrical, Computer and Communication Engineering (ECCE), Cox'sBazar, Bangladesh 2019, pp. 1-6, doi: 10.1109/ECACE.2019.8679200.

[6] Dourado C M J M, S. P. P. Da Silva, R. V. M. Da Nóbrega, P. P. R. Filho, K. Muhammad and V. H. C. De Albuquerque, "An Open IoHTbased Deep Learning Framework for Online Medical Image Recognition," in IEEE Journal on Selected Areas in Communications, doi: 10.1109/JSAC.2020.3020598.

[7] Ding W, M. Abdel-Basset, K. A. Eldrandaly, L. Abdel-Fatah and V. H. C. de Albuquerque, "Smart Supervision of Cardiomyopathy Based on Fuzzy Harris Hawks Optimizer and Wearable Sensing Data Optimization: A New Model," in IEEE Transactions on Cybernetics, doi: 10.1109/TCYB.2020.3000440.

[8] Diogo Ayres-de-Campos; Catherine Y. Spong; Edwin Chandraharan. "FIGO consensus guidelines on intrapartum fetal monitoring: Cardiotocography", in FIGO Intrapartum Fetal Monitoring Expert Consensus Panel, 2015, DOI 10.1016/j.ijgo.2015.06.020.

[9] Fortino, Giancarlo; Parisi, Daniele; Pirrone, Vincenzo; Di Fatta, Giuseppe. "BodyCloud: A SaaS approach for community Body Sensor Network", Future Generation Computer Systems - The International Journal of Escience, 2014, 35, pp 62-79, doi 10.1016/j.future.2013.12.015

[10] Fortino G, A Guerrieri, F Bellifemine, R Giannantonio. "Platformindependent development of collaborative wireless body sensor network applications: SPINE2", 2009 IEEE International Conference on Systems, Man and Cybernetics, pp 3144-3150

[11] Fortino, Pace, Pasquale; Aloi, Gianluca; Gravina, Raffaele; Caliciuri, Giuseppe; Giancarlo; Liotta, Antonio. "An Edge-Based Architecture to Support Efficient Applications for

Healthcare Industry 4.0". IEEE Transactions on Industrial Informatics, 2019, v 15 pp.481-489, doi 10.1109/TII.2018.2843169

[12] Guimaraes et al. R R, "Intelligent Network Security Monitoring Based on Optimum-Path Forest Clustering," in IEEE Network, vol. 33, no. 2, pp. 126- 131, March/April 2019, doi: 10.1109/MNET.2018.1800151.

[13] Hassan M M, M. R. Hassan, S. Huda and V. H. C. de Albuquerque, "A Robust Deep Learning Enabled Trust- boundary Protection for Adversarial Industrial IoT Environment," in IEEE Internet of Things Journal, doi: 10.1109/JIOT.2020.3019225.

[14] Kotenko M , I. Saenko, A. Kushnerevich and A. Branitskiy, "Attack Detection in IoT Critical Infrastructures: A Machine Learning and Big Data Processing Approach," 2019 27th Euromicro International Conference on Parallel, Distributed and Network-Based Processing (PDP), Pavia, Italy,2019, pp. 340-347,doi: 10.1109/EMPDP.2019.8671571.

[15] Kotronis, C., Minou, G., Dimitrakopoulos, G., Nikolaidou, M., Anagnostopoulos, D., Amira, A., Bensaali, F., Baali, H., and Djelouat, H. (2017). Managing criticalities of e- health IoT systems. In 17th International Conference on Ubiquitous Wireless Broadband (ICUWB), pages 1–5. IEEE.

[16] Lin R , Z. Ye, H. Wang and B. Wu, "Chronic Diseases and Health Monitoring Big Data: A Survey," in IEEE Reviews in Biomedical Engineering, vol. 11,pp275-288, 2018,doi:10.1109/RBME.2018.28294.

[17] G. Loubet, A. Takacs and D. Dragomirescu, "Implementation of a Battery-Free Wireless Sensor for Cyber-Physical Systems Dedicated to Structural Health Monitoring Applications," in IEEE Access, vol. 7, pp. 24679-24690,2019, doi: 10.1109/ACCESS.2019.2900161.

[18] Khan S, K. Muhammad, S. Mumtaz, S. W. Baik and V. H. C. de Albuquerque, "Energy-Efficient Deep CNN for Smoke Detection in Foggy IoT Environment," in IEEE Internet of Things Journal, vol. 6, no. 6, pp. 9237- 9245, Dec. 2019, doi: 10.1109/JIOT.2019.2896120.

[19] Mehmood et al. I, "Efficient Image Recognition and Retrieval on IoTAssisted Energy-Constrained Platforms From Big Data Repositories," in IEEE Internet of Things Journal, vol. 6, no. 6, pp. 9246- 9255, Dec. 2019, doi: 10.1109/JIOT.2019.2896151.

[20] Niitsu et al. K, "A Self-Powered Supply-Sensing Biosensor Platform Using Bio Fuel Cell and Low-Voltage, Low-Cost CMOS Supply Controlled Ring Oscillator With Inductive- Coupling Transmitter for Healthcare IoT," in IEEE Transactions on Circuits and Systems I: Regular Papers, vol. 65, no. 9, pp. 2784-2796, Sept. 2018, doi: 10.1109/TCSI.2018.2791516.

[21] Rafique W, X. Zhao, S. Yu, I. Yaqoob, M. Imran, W. Dou, An Application Development Framework for Internet- of-Things Service Orchestration, IEEE Internet of Things Journal, Vol. 7 (5), pp. 4543-4556, May, 2020.

[22] Razzak M I, M. Imran, G. Xu, Big Data Analytics for Preventive Medicine, Neural Computing and Applications, Vol. 32, pp. 4417–4451, Apr, 2020.

[23] Rehman M H U, E. Ahmed, I. Yaqoob, I. A. T. Hashem, M. Imran and S. Ahmad, "Big Data Analytics in Industrial IoT Using a Concentric Computing Model," in IEEE

Communications Magazine, vol. 56, no. 2, pp. 37-43, Feb. 2018, doi: 10.1109/MCOM.2018.1700632.
[24] Rizwan et al. A, "A Review on the Role of Nano-Communication in Future Healthcare Systems: A Big Data Analytics Perspective," in IEEE Access, vol. 6, pp. 41903-41920, 2018, doi: 10.1109/ACCESS.2018.2859340.
[25] Raza M, M. Awais, N. Singh, M. Imran, S. Hussain, Intelligent IoT Framework for indoor healthcare monitoring of Parkinson's Disease Patients, IEEE Journal on Selected Areas in Communications, 2020.
[26] Sundaravadivel P,,K. Kesavan, L. Kesavan, S. P. Mohanty and E. Kougianos, "Smart-Log: A Deep- Learning Based Automated Nutrition Monitoring System in the IoT," in IEEE Transactions on Consumer Electronics, vol. 64, no. 3, pp. 390-398, Aug.2018,doi:10.1109/TCE.2018.286
[27] Santos, M. A. G., Munoz, R., Olivares, R., Filho, P. P. R., Ser, J. D., & Albuquerque, V. H. C. de. "Online Heart Monitoring Systems on the Internet of Health Things Environments: A Survey, a Reference Model and an Outlook". Information Fusion,doi:10.1016/j.inffus.2019.06.0
[28] Silveira, F., Neto, I. R., Machado, F. M., and da Silva, M. P. (2019). "Analysis of industry 4.0 technologies applied to the health sector: Systematic literature review". Occupational and Environmental Safety and Health,
[29] Sodhro A H, S. Pirbhulal, Z. Luo and V. H. C. de Albuquerque, "Towards an optimal resource management for IoT based Green and sustainable smart cities", in Journal of Cleaner Production, Vol. 220, 2019, pp.11671179,doi:10.1016/j.jclepro.20
[30] Zhang Y, L. Sun, H. Song and X. Cao, "Ubiquitous WSN for Healthcare: Recent Advances and Future Prospects," in IEEE Internet of Things Journal, vol. 1, no. 4, pp. 311-318, Aug. 2014, doi: 10.1109/JIOT.2014.2329462;

Automated Billing Smart Trolley and Stock Monitoring

M.Kabil Dev[1], R.Kannan[2], M.Agarshan[3], S.Karthik[4], Dr. K.Lakshmi [5]
[1,2,3,4] Students, Department of EEE, Sri Krishna College of Technology, Coimbatore, India
[5]Professor, Department of EEE, Sri Krishna College of Technology, Coimbatore, India

Abstract - In this modern world, all people like to use products which is of high technology. People don't want to waste time and energy by using conventional systems. Rather they prefer advanced devices which is automated, smart, to finish their work soon. Smart trolley is one such advanced devices which is more flexible and a easy process to complete shopping without any delay. Customers in the store don't want to wait for long time to pay their bill. In the smart trolley the bill can be paid simultaneously without waiting in the counter. Once the shopping is over payment is done through online or offline based on the customer. This flexibility is not provided by the existing trolley. To overcome this, Smart trolley is preferred. The newly designed smart trolley consists of Arduino UNO, RFID reader and tag, Wi-Fi module. Apart from this payment feature, smart trolley allows the admin to view the stock details also. Each product's stock can be monitored and planned accordingly without any extra manual work.

Keywords:- Arduino Uno, Website development, Bill generation, php, html, mysql, Stock monitoring

INTRODUCTION

Only 8% of customers use existing smart trolley. Many customers don't use the available smart trolley because of its complexity in accessing, payment modes, membership cards. The complexity is because of the difficult options in the trolley. Many available smart trolleys allow only online payment or payment through master cards which is not afforded by all customers [1]. Smart trolleys is not installed in many stores because of its cost. The cost is high because of the design that includes servo motor which also requires high maintenance [2]. Whereas in the new design it is overcome by using a IR sensor which reduces the maintenance, power consumption and the cost of the trolley also. The accessing options are also so simple that every customer can use it. It doesn't include any login option, or membership card. This trolley is proposed, so that difficulty in using existing smart trolley is reduced, additional options are included, many components are replaced from the existing one to decrease the cost of the smart trolley. The working is also simple that the customer can add products into the trolley by using the switch and it can be removed similarly. After the shopping is over bill can be generated by using the bill switch. Once the bill switch is pressed, the data is transferred, so that the customer can have a look at the the entire bill and the total price based on the discount in the store. When the shopping is completed by the customer, the stock details gets updated and displays the current balance stock to the admin. So the manual work to keep on monitor the stocks is not needed when the newly designed smart trolley is used in the store.

A. Literature Review

Paper [1] describes about the shopping trolley using microcontroller, GSM module, RFID Module, LCD display. It requires individual login ID to use the trolley. This also allows

payment only through online using master cards or membership cards.

Paper [2] is about the shopping trolley using Raspberry Pi, RFID Module, DC motor to close the trolley. The presence of dc motor increases the maintenance cost, battery life time will also be less because motor requires high power.

Paper [3] describes about the cart consists of RFID reader and all product in the shop has its own tag. In this design, the trolley does not ensure whether the door is closed or not after the shopping is done, so there is a chance of adding products after the bill is generated.

Already existing smart trolley allows payment via online or through master cards which is not afforded by everyone. If the customer adds or removes any product after the bill is generated it will not be detected in the existing system. When existing smart trolley is used the stock details in the shop cannot be monitored.

PROPOSED SMART TROLLEY SYSTEM

The advanced version of trolley which is very much flexible with improved features for the customers in all aspects is smart trolley system.

The proposed system is flexible to the customers as it allows them to pay via online as well as offline. All products in the shop is fixed with RFID tag. Our device consists of a RFID reader. When the products are added, the RFID reader reads the particular product's tag and displays in the screen. If any product is to be removed it can be done using the remove switch. Once the bill is generated if any product is added or deleted will be alerted using an led. If the payment is done, it will be indicated so manual checking is not needed. Stock availability can be monitored by the admins if the shopping is done using trolley. Based on the offers at festival time, device will scan the product and calculate the price after discount, display the price in LED screen. It also allows the admin to monitor stock details so, it can be restored once the product gets over.

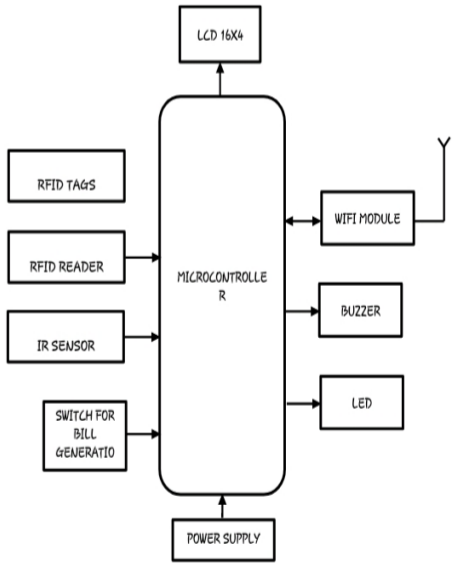

Fig.2.1 Block diagram of proposed model

Each trolley consists of a RFID reader. All product in the shop has an RFID tag which contains separate ID. These Ids of the products tags are fed in the controller so that when it is scanned the particular product's name displays in the screen.

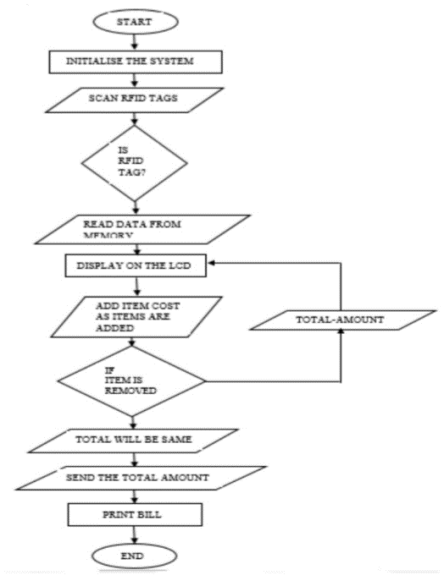

Fig.2.2 Flowchart of the smart trolley

Step 1: Start the process.
Step 2: Place the products in trolley.
Step 3: Display product's information on LCD.
Step 4: Remove product if not needed.
Step 5: After shopping, press the buzzer.
Step 6: Updates the billing Information.
Step 7: IR sensor will activate.
Step 8: No products can be taken out.
Step 9: Bill can be paid through online or offline.

HARDWARE IMPLEMENTATION

Initially smart trolley is connected to a hotspot through which the bill details can be seen. When the products are scanned it displays in the led screen with a beep sound. After the bill is generated it can be seen by both admin and customer. Once the bill is generated IR sensor activates, so no components can be further added or removed. The components used for implementing the smart trolley includes Arduino UNO, RFID module, Liquid Crystal Display, IR sensor Wi-Fi module, Buzzer, Switches, led light, power adapter, QR code.

A. Arduino UNO

Arduino Uno is a microcontroller board based on ATmega328P. It has twenty digital input/output pins half-dozen analogue inputs, a sixteen MHz quartz, a USB association, an influence jack, Associate in Nursing ICSP header and a button. Arduino UNO contains everything which are required to provide support to the controller. It is made to come in connection with the circuit by using an USB cable, battery to initialise or to connect it with a AC to DC adapter. The Uno differs from other boards as FTDI USB-to-serial driver chip is not used in this controller.

Fig.3.11 Arduino UNO

B. RFID module

The RFID or Radio Frequency Identification system has two major components, a transponder / tag attached to any of the component which is to be found, and a Transceiver also known as an interrogator / Reader. Reader contains a Radio Frequency module and antenna that produces a high frequency field. Instead of that it has a microchip which is used to store and processe data, as well as an antenna is placed for receiving and transmitting signal. To read the tagged information, it is placed next to the Reader (it does not have to be directly within the reader's view). The Reader produces an electromagnetic field that causes electrons to move the tag antenna and then to power the chip. The RFID reader also has a transceiver in it. When the signal returns to the tag using an

RFID student antenna it is inserted into the demodulator and displayed with a decoder.

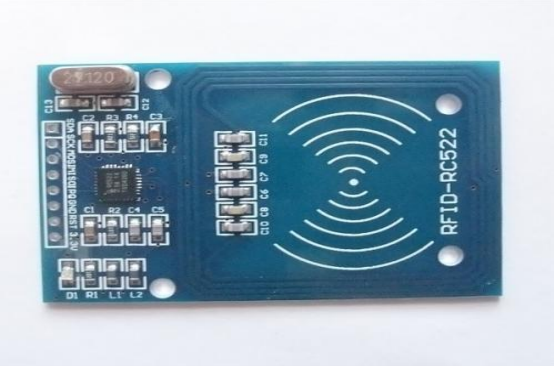

Fig.3.12 RFID Module

C. Liquid Crystal Display

Liquid crystal displays (LCD's) contain building materials, which include structures for both beverages and crystals. Instead of having a point of melting, they have a temperature inside where the molecules almost go as they would in a liquid, but are made it as a single group together in an orderly manner like crystals. The LCD consists of two glass jars, with crystal sand woven material between them. The inside of the glass plates is filled with transparent electrodes describing the character, symbols or patterns that will be shown by the polymeric layers that exist in the middle of the electrodes and the liquid crystal inside the glass plate, which makes crystal liquid molecules maintain a defined standing angle.

Fig.3.13 Liquid Crystal Display

D. Wi-fi module

The ESP8266 is a UART Wi-Fi optical transmission module powered by ultralow power, specially designed for the needs of the new connected world. Provides a complete and compliant Wi-Fi network solution, allowing it to host the application or download all Wi-Fi communication functions from another ESP8266 its with less advanced development and less loading during operation.

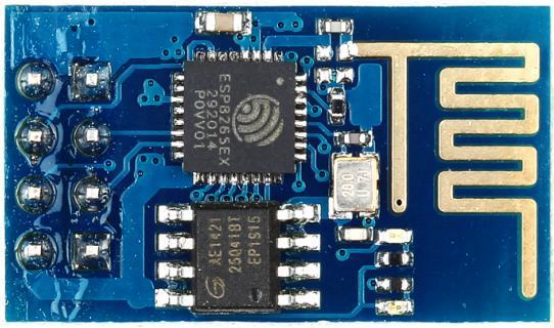

Fig.3.14 Wi-Fi Module

The architecture diagram of the designed smart trolley is as follows based on which the proposed system works.

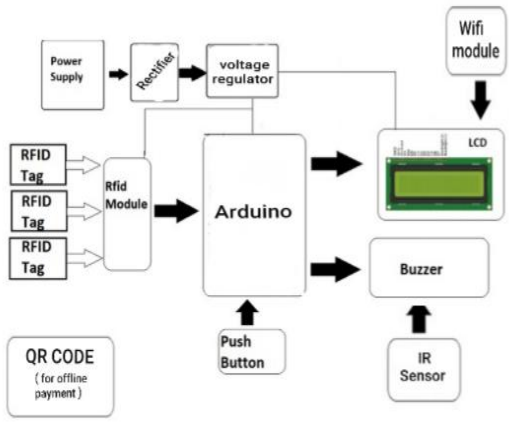

Fig.3.2 Architecture diagram

In the designed shopping cart all details of the products are stored in a database on a server through wi-fi module. RFID tags are installed in each and every products to identify various products. As the products are put into the trolley the RFID reader will recognise the product through scanning the tag

and the cost of the products, expiry date will be displayed on the screen. If the customer wants to remove the product from the trolley, then the remove button should be pressed, and when the customer scans the product again, it gets removed from the list. Now the lcd screen displays the updated value. When the purchase is over the customer can press the bill generation switch. It takes few seconds to transfer data to the server. After transferring, the total cost of the products can be seen in the server of the shop. The IR sensor is mounted on the cart so that when the bill is received it can detect any major changes in the trolley and indicate guided operation. This helps to determine if the customer has added or removed any product after monetization. On the other hand, the data of the particular trolley is sent to the server using a wi-fi module. When the bill is generated stock details in the admin's server gets updated and shows the balance stock immediately. If the payment is online, it can be paid through apps such as paytm, google pay, phonepe and other apps, and if it is not online, the data will be stored in the QR code.

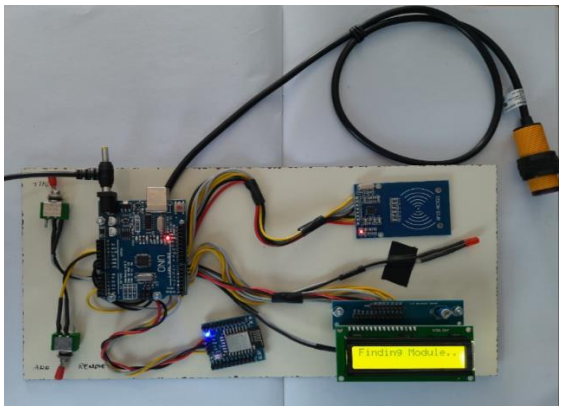

Fig.3.3 Hardware setup

Details of stock management can also be noted by the admin and plan accordingly. If there is any discount, it should be changed on the admin's page so that when the bill is received the discounted price is also calculated.

This smart trolley also allows the admin to display the bill based on the available offers/discounts in the shop. Once the shopping is over and the payment is done the admin can reset the particular trolley by clearing the data through the webpage, so that the next customer can use immediately.

SOFTWARE IMPLEMENTATION

The circuit is designed in the Proteus software, simulated output cannot be obtained because RFID is a realtime application tag so it cannot be scanned during simulation in the software. The software tools used are : Arduino IDE, php, html, mysql . Those tools are used for feeding the process in the micro controller, creating the webpage for bill generation, admin page and stock details .

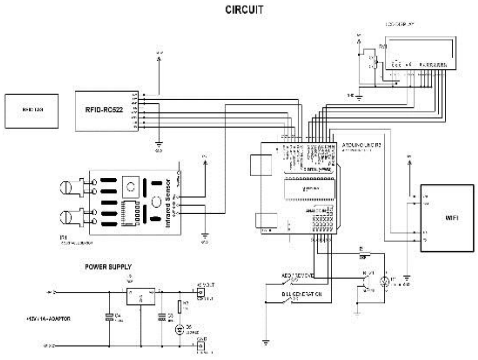

Fig.4.1 Circuit Diagram

RESULTS AND DISCUSSION

Once the product is scanned there will be a beep sound to indicate that it is added in the trolley. Similarly, the required products are added. If a product is to be removed then push the remove button and scanned so that it is removed. Once the buzzer is pressed bill data is sent to the webpage where the customer can see the products list and pay through online or offline. Simultaneously the admin can also know about the stock availability.

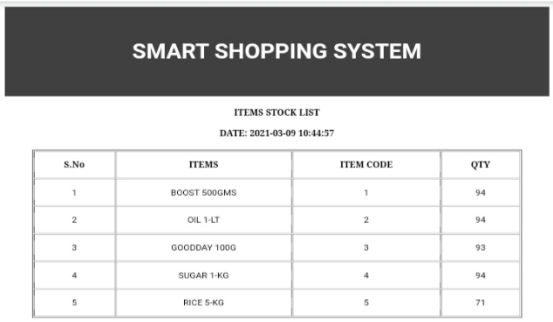

S.No	ITEMS	ITEM CODE	QTY
1	BOOST 500GMS	1	94
2	OIL 1-LT	2	94
3	GOODDAY 100G	3	93
4	SUGAR 1-KG	4	94
5	RICE 5-KG	5	71

Fig.5.11 Stock details of the shop

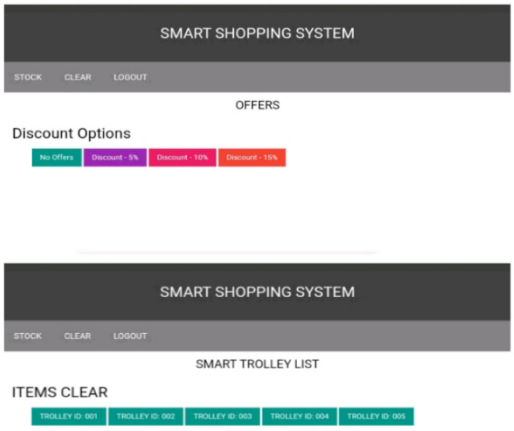

Fig.5.12 Options in Admin server

CONCLUSION AND FUTURE SCOPE

The smart shopping trolley with new technology allows the customers to shop efficiently. This is designed in such a way that the data of the customer is sent to the counter through wi-fi module, which reduces standing in long queue in the the bill counter, On the other hand admin can monitor the stocks and plan in advance.

In the future, there can be a keyboard so that money limit can be set by the customer and shop accordingly. Through technology packing can be done so that home delivery can be made possible.

REFERENCES

[1] P.T. Sivagurunathan, P. Seema, M. Shalini, R. Sindhu Smart Shopping Trolley Using RFID International Journal of Pure and Applied Mathematics Volume 118 No. 20 2018, 3783-3786.

[2] Tharindu Athauda, Juan Carlos Lugo Marin, Jonathan Lee, Nemai Karmakar Department of Electrical and Computer Systems Engineering Robust Low-Cost PRFID Based Smart Shopping Trolley IEEE Journal of Radio Frequency Identification DOI 10.1109/JRFID.2018.2866087.

[3] K.Gogila Devi,T.A.Kaarthik, K.Nandhini, S.Priya Smart Shopping Trolley Using RFID Based on IoT International Journal of Innovative Research in Computer and Communication Engineering Vol. 5, Issue 3, March 2017.

[4] Sarika S. Pandey, Soumya R. Gupta, Meenaz M. Shaikh, Komal M. Rawat, Prof. Pravin Jangid, Prof. Ragini Mishra Smart Cart Using Arduino and RFID Volume: 05 Issue: 03 | Mar-2018.

[5] Vaishali Rane, Krutik Shah, Kaushal Vyas, Sahil Shah, Nishant Upadhyay Smart Trolley Using RFID Volume: 06 Issue: 01 | Jan 2019.

[6] Akshay Kumar, Abhinav Gupta, S Balamurugan, S Balaji and Marimuthu R Smart Shopping Cart School of Electrical Engineering, VIT University, Vellore.

[7] Manikandan T, Mohammed Aejaz M. A, Nithin Krishna N. M, Mohan Kumar A. P, Manigandan R RFID based Advanced Shopping Trolley for Super Market Journal of Chemical and Pharmaceutical Sciences ISSN: 0974-2115.

[8] Mr.P. Chandrasekar, Ms.T. Sangeetha Smart Shopping Cart With Automatic Billing System Through RFID And ZigBee CICES2014 - S. A. Engineering College, Chennai, Tamil Nadu, India.

[9] Gaikwad Prerna, Kalekar Shital, Shete Renuka, Thorat Komal, Nita R. Mhaske Smart Billing Trolley Using RFID And LIF International Journal of Advanced Research in Electrical, Electronics and Instrumentation Engineering Vol. 6, Issue 9, September 2017.

Automatic Vacuum Cleaner for Hospitals

Divya M[1], Pavidra K[2], Veeresh P C[3], Vishaal S[4], R.Satheesh Kumar [5]
[1,2,3,4] Student, Electrical and Electronics department, SNS college of technology, Tamil Nadu, India.
[5] Professor, Electrical and Electronics department, SNS college of technology, Tamil Nadu, India.

Abstract - Households of today are becoming smarter and more automated. Home automation delivers convenience and creates more time for people. Domestic robots are entering the homes and people's daily lives, but it is yet a relatively new and immature market. However, a growth is predicted and the adoption of domestic robots is evolving. The purpose of this project is to design and implement a Vacuum Robot which has two cleaning modes Autonomous and Manual mode and manual mode is via phone application. Vacuum Cleaner Robot is designed to make cleaning process become easier rather than by using manual vacuum. The main objective of this project is to design and implement a vacuum robot prototype by using Arduino Mega, Laser TOF sensor, servo motor, motor driver L298N, Ultrasonic Sensor, and Vacuum suction unit and to achieve the goal of this project. Vacuum Robot will have several criteria that are user-friendly

INTRODUCTION

Robot is an electro-mechanical machine and is used for various purposes in industrial and domestic applications. Robot appliances are entering in the consumer market, since the introduction of I-Robots. Many related appliances from various companies have been followed. Initially the main focus was on having a cleaning device. As the time pass on many improvements were made and more efficient appliances were developed. In this research work a floor cleaner robot based on ATMEGA 2560- have been developed. This cleaner robot is an electric home appliance, which works in two modes as per the user convenience
"Automatic and Manual". Unlike other floor cleaner robots this is not a vacuum cleaner robot. It performs sweeping and mopping operation. Detachable mop is used for wet

mopping. It works on 12V supply. In the automatic mode, robot performs all operations itself. Firstly robot starts it moves forward and perform cleaning action. For obstacle detection and to avoid hurdle Laser TOF sensor have been used. If any hurdle detected then robot change the lane automatically, does not stop cleaning action. It follows zigzag path for user convenience, water sprayer is attached which automatically spray water for mopping, therefore no need to attach wet cloth again and again for mopping. Motor driver circuit have been used to drive the motors. In the manual mode, user itself operates the robot via an android application using smart phone.

BLOCK DIAGRAM

Fig-1: shown below is the block diagram of Automatic Floor Cleaner.

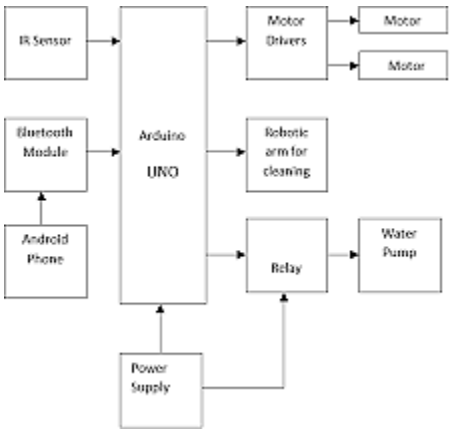

Fig-1: Block diagram 2.1

HARDWARE USED

Arduino Mega 2560:

The Arduino Mega is a microcontroller board based on the ATmega2560. It has 54 digital input/output pins (of which 14 can be used as PWM outputs), 16 analog inputs, 4 UARTs, a 16 MHz crystal oscillator, a USB connection, a power jack, an ICSP header, and a reset button.9contains everything needed to support the microcontroller; simply connect it to a computer with a USB cable or power it with AC-to-DC adapter or battery to get started.

Ultrasonic Sensor:

This economical sensor provides 2cm to 400cm of non -contact measurement functionality with a ranging accuracy that can reach up to 3mm. Each HCSR04 module includes an ultrasonic transmitter, a receiver and a control circuit. It can be used for avoiding obstacles as well as edge detection. In our project we have tested both the cases.

DC Geared Motor:

Geared dc motor can be defined an extension of DC motor. A geared DC motor has a gear assembly attached to the motor. The speed of the motor is counted in terms of rotations of the shaft per minute and is termed as RPM. The gear assembly helps in increasing the torque and reducing the speed. Using the correct combination of gear in a gear motor, its speed can be reduced to any desirable figure.

Vacuum motor:

It is a mechanical machinery that creates negative pressure which helps in sucking air. Vacuum pump exchanges the mechanical input power rotating shaft into pneumatic or hydraulic power by evacuating the air or liquid contained in a system. The pressure levels thus become lowered than the outside atmospheric pressure. The amount of power produced solely depends on the volume of air evacuated and the pressure difference being produced. The low pressure is achieved by moving a cycle of blades by a motor the motion of air through the pump.

l298n Dual H-Bridge Motor Driver:

H-Bridges are typically used in controlling motors speed and direction, but can be used for other projects such as driving the brightness of certain lighting projects such as high-powered LED arrays.

VL53LOX:

The VL53L0X is a Time-of-Flight distance sensor. The sensor contains a very tiny invisible laser source, and a matching sensor. The VL53L0X can detect the "time of flight", or how long the light has taken to bounce back to the sensor. It can measure a range of 30-1000mm.In this project we have used it for obstacle detection. It can be used for avoiding obstacles as well as edge detection.

Bluetooth (HC - 06):

For the communication of the robot with the cell phone or a mobile we are using the Bluetooth device. The Bluetooth device (HC-06) is attached to the robot that receives the data from the mobile and also it can transmit the data. It is used for converting serial port to Bluetooth. It has two modes: Master and Slave. Bluetooth is a wireless communication protocol running at the speed of 2.4 GHz with the architecture of client-server and which is suitable for forming personal area networks. It is designed for devices such as mobile phones (low power). Bluetooth protocol uses the MAC address of the device. Bluetooth gives the connectivity between two devices using their MAC address.

SUBMERSIBLE PUMP:

A 5V water pump is used for dripping the water for wet mopping.

Servo Motor:

The Servo Motor basically consists of a DC Motor, a Gear system, a position sensor and a control circuit. The Gear and shaft assembly connected to the DC motors lower this speed

into sufficient speed and higher torque. The position sensor senses the position of the shaft from its definite position and feeds the information to the control circuit. The control circuit accordingly decodes the signals from the position sensor and compares the actual position of the motors with the desired position and accordingly controls the direction of rotation of the DC motor to get the required position.

2.2 ALGORITHM:

It is stated earlier that the robot having two distinct operational modes and they are:

Manual Mode

Automated Mode

Manual Mode:

When the mode selection switch is HIGH robot goes to manual mode. Manual mode allows the users to operate the robot hardly to reach places. The user has freedom to command the robot to create any pattern. In autonomous mode obstacles and cliffs are not handled automatically by on board sensors and controllers. But as the user operates the robot by him in manual mode. The robot may bump an obstacle badly or fall from stairs it has to be avoided manually by user. This may bring huge damage to the robot. This is accomplished by using any android app and programming accordingly. The Forward symbol moves the robot forward, Backward symbol moves the robot back, The Right and Left symbol moves the robot right and left respectively when pressed else the robot will be stationary.

Autonomous mode:

When the mode selection switch is LOW robot goes to Autonomous mode. Usually, autonomous mode is guided by algorithms for path planning of the robot. Path planning is an important factor because the efficiency of cleaning robot is very much dependent on it.

The route map of the algorithm used here is like the letter 'S'. This algorithm is the fastest process to cover the entire room area. With every collision with obstacle the turning direction of the robot continuously changes under this mode. Fig. 10. 'S' shape pattern motion path. For this algorithm, after every collision the robot has a sequence of movements. They area:

Back

90deg Turn (Right/Left)

Go

90deg Turn (Left/Right)

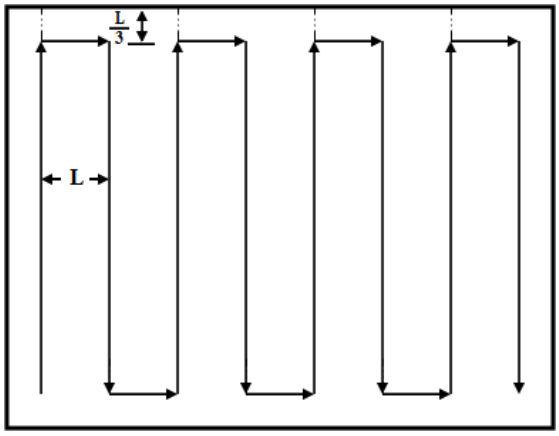

Fig-2: 'S' path for the automation

When the robot is turned on with mode selection switch LOW robot goes to autonomous mode here a count is initialized to zero and robot starts moving forward.

When an obstacle is detected from the laser TOF sensor the servo motor turns in left and right direction. If right distance is greater than left distance the robot turns left setting count = count+ 2 else it turns left setting count = count +1. If the obstacle is detected again depending on the count value it turns right or left accordingly. If count is odd robot takes a right turn and if count is even robot takes a left turn.

RESULTS AND DISCUSSION

When the robot is turned on its in the manual mode where the user can connect the robot to his phone via Bluetooth and control the robot

as his choice. By changing the state of the mode selection switch robot is pushed to the automatic mode and move in a 'S' path. Based on the type of cleaning required i.e., dry or wet cleaning the suction unit or dripping unit can be turned on or off. It was observed that the robot was quite efficient in its cleaning, around 80% of efficiency was achieved.

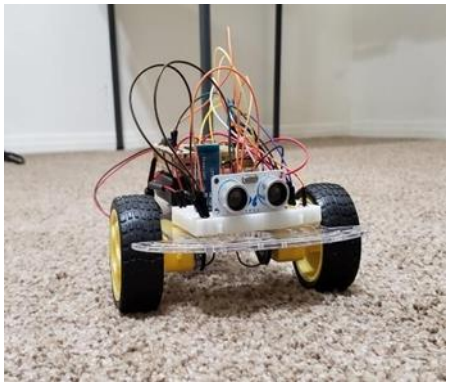

Fig-3: Picture of the project

CONCLUSIONS AND FUTURE WORK

This research facilitates efficient floor cleaning with sweeping and mopping operations. This robot works in two modes automatic and manual for user convenience. This proposed work provides the hurdle detection in case of any obstacle that comes in its way. An automatic water sprayer is attached which sprays water for mopping purpose for the convenience of user. User can also operate this robot manually with the help of smartphone. It reduces the labour cost and saves time also and provides efficient cleaning. In automatic mode, the robot operates autonomously. The operations such as sweeping, mopping and changing the path in case of hurdle are performed automatically Nevertheless, there are still new ideas to improve the developed system and to add new functionality to it. The additional features that may be added in autonomous cleaner robot are GSM control system using mobile phones for cleaning process. The control is also enhanced by controlling the robot by Bluetooth or ZigBee. And by implementing solar panel in the robot, we can charge the battery using light energy which can enhance the robot to operate in power failure condition. By implementing the fuzzy logic in the autonomous cleaner robot, we can enable artificial intelligence in cleaning.

REFERENCES:

Ryo Kurazume, Shigeo Hirose, "Development of a Cleaning Robot System with Cooperative Positioning System" in Autonomous Robots (2000) Volume 9, Issue: 3, Publisher: Springer, Pages: 237-246.

Sewan Kim, "Autonomous cleaning robot: Roboking system integration and overview" in IEEE International Conference on Robotics and Automation 2004 Proceedings ICRA 04 2004 (2004) Pages: 4437-4441 Vol.5.

Chih-Hao Chen and Kai-Tai Song: "Complete Coverage Motion Control of a Cleaning Robot Using Infrared Sensors", Proceedings of the 2005 IEEE International Conference on Mechatronics July 10, 2005, Taipei, Taiwan.

Charles A. Schuler, Willam L. Mcnamee, "Industrial Electronics and Robotics," Mcgraw- Hill International Edition, Industrial Electronics Series, 2003.

Manreet Kaur, Preeti Abrol "Design and Development of Floor Cleaner Robot (Automatic and Manual) "International Journal of Computer Applications (0975 – 8887) Volume 97– No.19, July 2014.

[6] A Study on Development of Home Mess-Clean- up Robot McBot- YoungkakMa, Seungwoo Kim, Dongik Oh and YoungwanCho. Buck, 'The Best Robot Vacuums of 2015 | Top Ten Reviews', Top Ten REVIEWS, 2014. [Online]. Available: http://robot-vacuumreview.toptenreviews.com/.

Harvey Koselka, Bret A. Wallach, David

Gollaher, "Autonomous floor mopping apparatus," U.S. Patent 6741054 B2, May 25, 2004.
Joseph L. Jones, Newton E. Mack, David M. Nugent, Paul E. Sandin, "Autonomous floor-cleaning robot," U.S. Patent 6883201 B2, April 6, 2005.

Automatic Vehicle Speed Manage System in a Limited Region

R. Arasi[1], V. Selva lincy[2], B. Balamurugan[3]
[1] U.G Students, B.E-Department of Electronics and communication Engineering, Sardar Raja College of Engineering, Alangulam, Tirunelveli, Tamil Nadu, India
[2] Associate Professor, Head of the Department, Department of Electronics and Communication Engineering, Sardar Raja College of Engineering, Alangulam, Tirunelveli, Tamil Nadu, India

Abstract - This paper aims at automatically controlling the speed of vehicles at speed restricted areas such as schools, hospital zones etc. Nowadays the drivers drive vehicles at high speed even in speed limited areas without considering the safety of the public. The traffic police are not able to control them with full effect. Also, it is not practical to monitor these areas throughout. This paper paves way for controlling the speed of the vehicles within certain limit in restricted zones without interruption of the drivers. This automated speed controlling system is built using the microcontroller- based platform of the Arduino Uno board. Here the Arduino is programmed in such a way that, the prescribed speed limit was incorporated in the transmitter unit which transmits the signals, and it was received by the receiver in the vehicle using Zigbee wireless communication technology and the speed of the vehicle was automatically controlled by the input signals by the receiver, with the help of speed encoder sensor. Once this technique was implemented the accidents will be reduced on a larger rate, and also reduce the nuisance by some drivers.

Keywords: Arduino, Receiver, Speed control, Zigbee, DC motor.

INTRODUCTION

Most of the road accidents in India occur due to over speed and rash driving of vehicles on public roads. The rate of accidents has increased as more vehicles come on to ground. To control and monitor the speed of vehicle on public roads the respective departments of government has taken necessary step. But it is not doing enough. Presently the motor vehicle departments have been provided with laser speed detectors. But a man has to be there on road, which is not an ideal way for monitoring. Also, the laser tracker is very costly. The thread for this paper was derived from the above-mentioned points. Here in this paper, we tried to develop a system to track the speed of the vehicle in a much simpler, economical way. This system has to work 24x7 automatically. Here setup device as a transmitter where the multiple devices are combined to monitor the speed of the vehicle when the vehicle enters above the prescribed speed and controls it by placing a receiver at the vehicles, based on the signals transmitted the speed of the vehicle get reduced by interfacing a microcontroller. The current speed of the vehicle is sensed by the dc motor and the output of it was given to the microcontroller where it compares the speed with the prescribed limit and the speed is controlled automatically. The technology used in this system to communicate between transmitter and receiver is Zigbee technology, which covers up to 10-100m within its range. By implementing this system, the accidents are reduced in this fast-moving world. In the developed and developing countries, people finds inconvenience with the road accidents, jamming of vehicles because of the drivers who dislike to obey the laws at the restricted

zone, where the speed has to be limited as prescribed in that zone by using a speed control system to limit the speed automatically using Zigbee technology.

LITERATURE REVIEW

India has a huge network of road connects throughout the nation. Our nation faces the maximum number of accidents and accidental fatalities while comparing to other nations around the world. A recent survey shows that the maximum rate of serious road accidents is raised due to high uncontrollable speed than necessary speed limited in the particular zone and also due to unaware obstacles. Minimizing the number of rate of accidents and their worst consequences are the most challengeable task for the automotive manufacturer, traffic government authorities and automotive research and development groups. The Ministry of Road Transport & Highways report revealed that India has got one road accident every minute in a year which lost one life in 3 minutes. In the majority of the cases (77%), the driver is at fault. This becomes more dangerous in populated regions like schools or hospitals. In school areas, speed breakers are provided to reduce the speed of vehicles, but the drivers do this manually. Many times, due to driver's fault speed is not controlled.

Vaishal B. Niranjane, et.al., Automatic vehicle speed control system: They explained the working of their system in three different zones where the speed wants to reduce automatically by using Zigbee technology. They are Normal zone, silence zone, speed limit zone. The speed is reduced by reversing the motor rotating direction through the microcontroller 8051. The Zigbee transmitter is placed at that zone while the vehicle reached that area the signal is received by the Zigbee receiver in the vehicle. The speed of the vehicle is compared with the determined speed in that area. If speed is higher for that zone the microcontroller takes in action to reduce the speed of the vehicle and if it is silence zone it disables to make a horn.

Amarnarayan, et.al., Automatic over speed controlling of vehicle: The main aim of the authors to control the speed of the vehicle to avoid the accidents in the hospital zone, curve roads and deep cuts due to over speed. This can be done with the ZigBee technology with the arm-7 microcontroller. The prescribed speeds at that zone are incorporated in the transmitter module and when the receiver in the vehicle senses the signal that arm-7 microcontroller would check whether the driver reducing the speed for a limited time. After the timer passes the limited time, the microcontroller makes the signal to reduce the speed of the motor, which makes the vehicle decelerate without the action of the driver.

Gummarekula sattibabu, et.al., Automatic vehicle speed control with wireless in-vehicle road sign delivery system using arm 7: The objective is to design the electronic display controller for Vehicle Speed control and monitor the zones with the help of the embedded systems and they designed to display the information on the dashboard about the zone. Here if the sensible zone is detected by the receiver in a vehicle the signal processes in the controller and warns the driver by displaying it and gives a buzzer sound. There is a timer for driver action to decrease speed if the time passes then the vehicle automatically sets to desired predefined speed.

PROBLEM STATEMENT

The main concern of the modern automotive industry is passenger safety and accidents due to drivers' negligence are one of the problems for the roadside people. This problem is being

partly solved with the use of this vehicle speed control system.

TARGET SPECIFICATIONS:

After the study of the problem statement and the market needs for the system, the target specifications for the systems are being framed. The main parameters as follows

•Reliable
•Low cost
•Low power consumption
•Quick response
•Easy adaption in vehicles
•Highly secured

BLOCK DIAGRAM

Transmitter block:

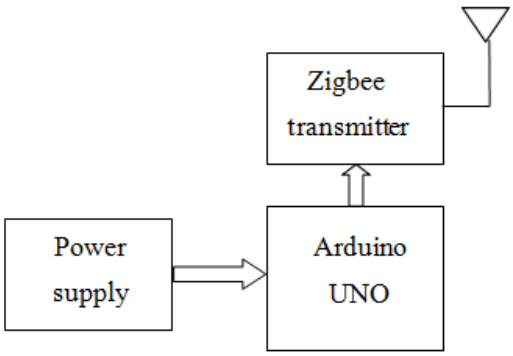

In this block, the Arduino microcontroller was programmed with a predefined speed limit and transmits the signal with the help of Zigbee wireless communication.

Receiver block:

In the receiver section, it receives the speed of the vehicle through speed encoder input signal, and other components of the receiver unit are a dc motor, motor driver, LCD display, Zigbee receiver, Arduino UNO as a microcontroller.

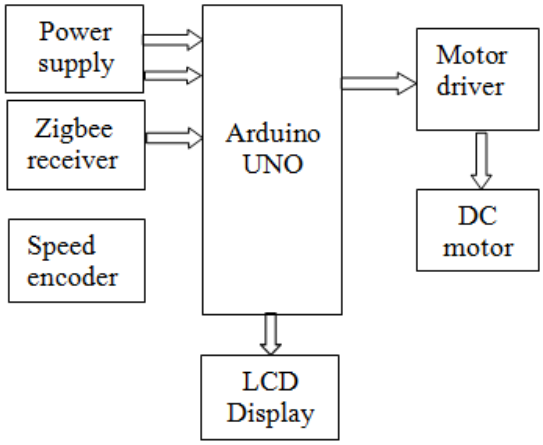

COMPONENTS

- Arduino (microcontroller)
- Zigbee transceiver
- Motor driver
- DC motor
- LCD display
- Speed encoder
- Power supply

WORKING

In this automatic vehicle speed control system, When the vehicle enters the speed limiting zone the transmitter block starts to work and transmit the signal to the vehicle receiver which is placed in the vehicle, the Zigbee receiver which is connected with microcontroller process the signals and compares the speed of vehicle with the predefined speed of that particular zone. The Arduino Uno was used as controller that two-controller were used here one for transmitter control and other for the receiver and other actions to take place based on the program set up in the controller. The transmitter circuit is powered by dc battery is enough for the working of Zigbee which is placed near the restricted zones. If the speed of the vehicle is less than the predefined speed programmed in the microcontroller no action takes place. If the speed of the vehicle is greater than the

predefined speed then the microcontroller controls the speed of the vehicle motor by sending a signal to the motor driver in it and the motor driver used reduces the speed of the electric motor. This speed control system assures that the number of accidents near the school and another specific zone to reach its minimum speed. this system requires very low cost, durable, low power, and gives maximum safety to the public and simple design to implement in the specific areas. This system also works on bad weather days.

CONCLUSION

This study shows the role of reducing vehicle speed automatically and its contributions to the safety of pedestrians and road users. Though the VSC system in a vehicle is effective, they help much in terms of improving safety, keeping both the passenger safety and the pedestrians on the roads. Considering the automatic VSC system is incorporate in school zones or hospital zones which allows the vehicle to act independently to slow down the vehicle when the vehicle comes at a higher speed which minimizes the accidents due to negligence of the driver actively and in a way more effectively.

REFERENCES

[1] Amulya A M, et.al., Intelligent speed control system, Volume 5, Issue 4, April 2018, pp.2537-2540.

[2] Vaishal B. Niranjane, et.al., Automatic Vehicle Speed Control System Using Zigbee Technology, IJEECS ISSN 2348-117X Volume 6, Issue 3, March 2017.

[3] Amarnarayan, et.al., Automatic Over speed Controlling of Vehicle, eISSN:2321-225X, pISSN:2321-2241, Volume 5, Issue 5, May2016.

[4] Gummarekula Sattibabu, et.al., Automatic Vehicle Speed Control with Wireless In-Vehicle Road Sign Delivery System Using ARM 7, Volume 2, Issue 8, pp.32-34.

[5] Amruta Ramase, et.al., Automatic Speed Control of Vehicle Using RF Communication, pp.419-422.

[6] Akash Batra, et.al., Automatic Car Speed Control with Wireless RF Control, ISSN: 2277-9655, et al., 7(4): April 2018, pp.592-597.

[7] R. Ashok Kumar et.al., A Beacon Based Automatic Vehicle Speed Control System for Restricted Zone, Volume 7, Issue X, October 2018, pp.1152-1159.

[8] Deepa. Design of Vehicle Speed Control System Using Wireless Instrument Cluster, Volume 4, Issue 1, January 2015.

[9] Dr.K.S.Tamilselvan, et.al., Android Based Vehicle Speed Control System in Critical Zone Using GPS Technology, volume 7, issue 6, June 2018, pp.639-644.

[10] K.Govindaraju, et.al., Embedded Based Vehicle Speed Control System Using Wireless Technology, Volume 2, Issue 8, August 2014, pp.1841- 1844.

Braille Typographer with Code Finder and Raconteur for People with Visual Impairment

Prof.RAJKUMAR T[1], Durka S[2], Priya M[3], Vivek V[4], Jagadeesh P[5]
[1] Assistant Professor/Department of ECE, Nandha College of Technology ERODE
[2,3,4,5] Department of ECE, Nandha College of Technology ERODE

Abstract - There are many Typographers are available to print the common language for common people. But these are character printer and not suitable for visually impaired. These problems are eradicated by the evaluation of some braille typographer. Although this type of typographer have some complication and snag. Then typist must know the braille language to access it. So we are brought some changes in the actual braille typographer to contribute the visually challenged persons. Like as text detection and communicator tool. Speech-to-Text Conversion (STT) systems have a lot of benefits for the visually impaired people and find their applications in our daily lives. In the same way, the aim of the system is to convert the input speech signals into the text output for the visual impaired in the educational fields.an approach to extract features by using Mel Frequency Cepstral Coefficients (MFCC) from the speech signals of isolated spoken words. Hidden Markov Model (HMM) method is applied to train and test the audio files to get the recognized spoken word. We are converting the characters into braille codes by mean of voice recognizer process. So typist no need to know the braille codes and also time conception is very less. Another Purpose of this method is to teach the braille code and to create some e-books through this process. At last we are overcome this tactile application to reduce time complexity.

Keywords: Visually Impaired person, Braille printer, voice recognizance, text to voice, self-learning support media.

INTRODUCTION

Major problem faced by the visual impairment is leaning, gathering information. Hence we introduce the voice recognizance and text to voice conversion technique in our project. We implement the project using three basic blocks. [1] code generation from braille to normal text and normal text to braille via mobile application . [2] controller unit, it responsible for instruction to mechanical part and mobile application. [3] mechanical part, it responsible for print braille codes on the A4 cardboard sheet. The block 1 contains speech recognize, code conversion, communication with microcontroller. The block 2 contains servo and stepper motor for moving the printer pencil, and communication device, microcontroller. The block 3 contains mechanical part. The application unit communicate to the printer by bluetooth (version 5.2) on the mobile. Braille is a system that comprises touch reading and writing that is used by people who are visually impaired. The braille script has a series of embossed dots that are arranged in a specific manner to represent a particular letter, number, or symbol and has different semantics and enunciations. The script is read from left to right but written in the opposite manner.. Unified English Braille(UEB) is based on Standard English Braille(SEB), with some significant changes. These changes are designed to take away ambiguity and provide a braille code for the entire English-speaking world. There are 3 main types of braille under the main script. [1] Grade 1 Braille is also called Uncontracted Braille which comprises 26 letters of the Roman alphabet. Each cell has dots embossed to represent one letter only. [2] Grade 2 This type of braille is more concise and can

represent many words but shortened forms and combinations of different cells. It is the most popular type and also consists of numerals, punctuations, and abbreviations for efficient use. Words are abbreviated in a single cell, single letter, or can even be represented by a specific symbol. There are various rules that have been drafted for the standardized and systematic use of grade 2 Braille Script. [3] grade 3 This type of Braille is used for personal purposes and cannot be used publicly.We using grade 1 type on this project. Voice convert into normal text and normal text is convert into braille. The bluetooth conveying braille code in order of 6 digit information. Like c1=0, c2=1, c3=0, c4=1, c5=0, c6=0. this is the single letter information. This information is catch by bluetooth in microcontroller. In which information used for instruction for braille printer operation or data for print it. It based on the word of visual impaired. HC-05 Bluetooth Module is a simple Wireless Communication device based on the Bluetooth Protocol. This module is based on BC417 Single Chip Bluetooth IC that is compliant with Bluetooth v2.0 standard and with support for both UART and USB interfaces. Bluetooth Communication is a 2.4GHz frequency based RF Communication with a range of approximately 10 meters. It is one of the most popular and most frequently used low range communication for data transfer, audio systems, handsfree, computer peripherals etc. Microcontroller is ardrino uno used. Printing pencil is heat caring tool. The image of braille code is converting into text by using of python based application and then text is converting into speech.

VOICE TO TEXT CONRESION

an approach to extract features by using Mel Frequency Cepstral Coefficients (MFCC) from the speech signals of isolated spoken words. Classification of speech into voiced or unvoiced sounds provides a useful basis for subsequent processing. A three way classification into silence/unvoiced/voiced extends the possible range of further processing to tasks such as stop consonant identification and endpoint detection for isolated utterances. In noisy environment, speech samples containing unwanted signals and background noise are removed by end point detection method. End point detection method is based on the short-term log energy and short-term zero crossing rate .Wheres(n) is the speech signal, Elog is the logarithmic short-term energy and ZCR is the short-term zero crossing rate.

Elog= Nn=1 log(s(n)2)

Elog is the logarithmic short-term energy

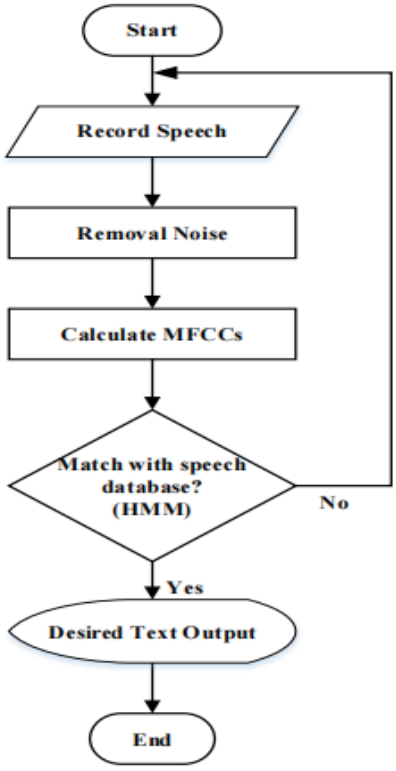

CODE GENERATION

code generation is the part of this project. In this part we converting the normal text to braille code. Hence we should know about braille code and how to convert it. This approach is made by using of python programming. First we take the equivalent value for each 26 character in braille and then how to modify it. For example for braille code:

CHARECTOR	BRAILLE	BRAILLE DOTS
a	⠁	1
b	⠃	12
c	⠉	14
d	⠙	145
e	⠑	15
1	⠼⠁	3456 1
2	⠼⠃	3456 12
3	⠼⠉	3456 14

Conversion of braille is don by the python programming part. That take the input as a normal text. All the letters in the word is separate and generate corresponding braille code like as above tabulation. Some of the example is given following.

T Take input as “ECE”:

The corresponding braille dots: E-135 C-14 E-135

algorithm :

Step 1: Start the program

Step 2: Assign the values for characters.(a=1, b=12, c=14, d=145, e=15 and so on)

Step 3: get the input from user

Ex: ECE

E is checked to preassigned character, and get equivalent braille dot code

C is checked to preassigned character, and get equivalent braille dot code

E is checked to preassigned character, and get equivalent braille dot code

ForE:

For C:

For E:

1	0	1	0	1	0
1	0	1	0	1	0
1	0	0	1	1	0

Step 4: Assign the value in [1X6] dimension array value

Step 5: this output given to the Bluetooth.

Step 6: stop the program

PRINTING UNIT

The printing unit contains the Raspberry pi, camara, arduino mega,nano, buk controller, sdcard module, stepper motor. The system is controlled by arduino mega and nano. The braille embosser get the insruction and code from Raspberry pi.

Inside the printer, an electronic module encompasses a microcontroller, which processes the Braille vectors generating a buffer to control the printer head’s hammers. Communication between the printer head and the microcontroller is bidirectional because it is necessary to know with accuracy the shaft’s position to actuate the cam- follower mechanismsIn addition to receiving the Braille vectors from the software, the microcontroller manages the position data coming from the printer head’s encoders and the embosser’s sensors.

This communication is made by Bluetooth. Bluetooth works by the simple principle of sending and receiving data in the form of radio waves. Every Bluetooth enabled device has a card-like attachment known as the Bluetooth adapter. It is this Bluetooth adapter that sends and receives data. A Bluetooth adapter has a particular range of connection.

The microcontroller controls the servomotor and the two step-motors that actuate the guide rollers and the printer head moving structure. Braille standard complying dots can be effectively embossed on paper. Our current work seeks to have visually impaired readers assess the printed pages to confirm that Braille characters are tactually discernable and comfortable to the fingertips. Normally, one A4 page can contain around 1,000 characters (25 lines of 40 cells).

With our system, printing a regular text page containing most of the letters in the alphabet and spaces between words roughly takes 10 min, which amounts to six A4 pages per hour. Note that this printing speed is suitable for home purposes only.

We are currently working on debugging the microcontroller's code to handle efficiently all input and output data and the daily situations traditional printers face such as paper run out, jams, diverse alerts, etc.

TEXT TO VOICE CONVERTION

The image files can be in PNG or JPEG formats. To convert image to text, first choose the language for the text to be extracted from the language drop down list. Then click the browse button to choose the file you want to extract text from. When the text extraction is complete, the result will be added to the text box above.

They are following steps involved in text to voice conversion.

Step 1: As you will access this, the first thing to do is upload the text you wish to convert. You can either type the text in the box provided or upload the file saved on your device.

Step 2: After entering the text, you've to select the language in which you want to listen to the text. Just click on the drop-down list and select any language.

Step 3: Now, you have to choose the speed variation for the spoken words. You can choose between normal, fast, and slow speeds.

Step 4: The next step is to select the voice type in which you need the output. Our tool provides you two options, which are male and female. Both of the voices seem natural and aren't robotic.

Step 5: Lastly, you have to tap the "Convert to Speech" button. Before hitting it, you can click the "Play" button to listen to the speech.

REFERENCES:

[1] Bo Li, ; Junbiao Liu, ; Zhiping Wang, ; Guangrong Fang, (2010). [IEEE 2010 IEEE Youth Conference on Information, Computing and Telecommunications (YC-ICT) - Beijing, China (2010.11.28-2010.11.30)] 2010 IEEE Youth Conference on Information.Aiding the visually impaired, developing an effcient Braille print.

[2] Anubhav Apurva,Palash Thakur, Anupam Misra,Aiding the visually impaired, developing an effcient Braille print.

[3] Paul Blenkhorn and Gareth Evans, Automated Braille Production from Word-Processed

[4] Documents,IEEE transactions on neural systems and rehabitation engineering,VOL 9, NO. 1, march 2001.

[5] Jevri Tri Ardiansah, Yasuhisa Okazaki. The Design and Prototyping of Braille to Speech Application as a Self-Learning

Support Media for Visually Impaired Person.

[6] Ardiansah JT, Tanaka H, Okazaki Y., "The Prototypes of Braille to Speech Application as a Self-Learning Support Media for Visually Impaired Person,". Japanese Society for Information and System in Education, 2019, (pp. 236-237)

[7] US Patent 4183683 A – Line Printer for the raised-dot language of Braille Characters.

Design and Implementation of E-Vehicle Charging Station Using Solar With IOT

Sivasaranya A[1], Soundharya K[2], Srithala M[3], Dr.Shanthi T[4]
[1,2,3] UG-Scholar, Department Of Electronics and Communication Engineering,
Kings College Of Engineering, Punalkulam, Pudukottai
[4]Assistant Professor, Department Of Electronics and Communication Engineering,
Kings College Of Engineering, Punalkulam, Pudukottai

Abstract - There are many Typographers are available to print the common language for common people. But these are character printer and not suitable for visually impaired. These problems are eradicated by the evaluation of some braille typographer. Although this type of typographer have some complication and snag. Then typist must know the braille language to access it. So we are brought some changes in the actual braille typographer to contribute the visually challenged persons. Like as text detection and communicator tool. Speech-to-Text Conversion (STT) systems have a lot of benefits for the visually impaired people and find their applications in our daily lives. In the same way, the aim of the system is to convert the input speech signals into the text output for the visual impaired in the educational fields.an approach to extract features by using Mel Frequency Cepstral Coefficients (MFCC) from the speech signals of isolated spoken words. Hidden Markov Model (HMM) method is applied to train and test the audio files to get the recognized spoken word. We are converting the characters into braille codes by mean of voice recognizer process. So typist no need to know the braille codes and also time conception is very less. Another Purpose of this method is to teach the braille code and to create some e-books through this process. At last we are overcome this tactile application to reduce time complexity.

Keywords: Visually Impaired person, Braille printer, voice recognizance, text to voice, self-learning support media.

INTRODUCTION

Major problem faced by the visual impairment is leaning, gathering information. Hence we introduce the voice recognizance and text to voice conversion technique in our project. We implement the project using three basic blocks. [1] code generation from braille to normal text and normal text to braille via mobile application . [2] controller unit, it responsible for instruction to mechanical part and mobile application. [3] mechanical part, it responsible for print braille codes on the A4 cardboard sheet. The block 1 contains speech recognize, code conversion, communication with microcontroller. The block 2 contains servo and stepper motor for moving the printer pencil, and communication device, microcontroller. The block 3 contains mechanical part. The application unit communicate to the printer by bluetooth (version 5.2) on the mobile. Braille is a system that comprises touch reading and writing that is used by people who are visually impaired. The braille script has a series of embossed dots that are arranged in a specific manner to represent a particular letter, number, or symbol and has different semantics and enunciations. The script is read from left to right but written in the opposite manner.. Unified English Braille(UEB) is based on Standard English Braille(SEB), with some significant changes. These changes are designed to take away ambiguity and provide a braille code for the entire English-speaking world. There are 3 main types of braille under the main script. [1] Grade 1 Braille is also called Uncontracted

Braille which comprises 26 letters of the Roman alphabet. Each cell has dots embossed to represent one letter only. [2] Grade 2 This type of braille is more concise and can represent many words but shortened forms and combinations of different cells. It is the most popular type and also consists of numerals, punctuations, and abbreviations for efficient use. Words are abbreviated in a single cell, single letter, or can even be represented by a specific symbol. There are various rules that have been drafted for the standardized and systematic use of grade 2 Braille Script. [3] grade 3 This type of Braille is used for personal purposes and cannot be used publicly.We using grade 1 type on this project. Voice convert into normal text and normal text is convert into braille. The bluetooth conveying braille code in order of 6 digit information. Like c1=0, c2=1, c3=0, c4=1, c5=0, c6=0. this is the single letter information. This information is catch by bluetooth in microcontroller. In which information used for instruction for braille printer operation or data for print it. It based on the word of visual impaired. HC-05 Bluetooth Module is a simple Wireless Communication device based on the Bluetooth Protocol. This module is based on BC417 Single Chip Bluetooth IC that is compliant with Bluetooth v2.0 standard and with support for both UART and USB interfaces. Bluetooth Communication is a 2.4GHz frequency based RF Communication with a range of approximately 10 meters. It is one of the most popular and most frequently used low range communication for data transfer, audio systems, handsfree, computer peripherals etc. Microcontroller is ardrino uno used. Printing pencil is heat caring tool. The image of braille code is converting into text by using of python based application and then text is converting into speech.

VOICE TO TEXT CONRESION

an approach to extract features by using Mel Frequency Cepstral Coefficients (MFCC) from the speech signals of isolated spoken words. Classification of speech into voiced or unvoiced sounds provides a useful basis for subsequent processing. A three way classification into silence/unvoiced/voiced extends the possible range of further processing to tasks such as stop consonant identification and endpoint detection for isolated utterances. In noisy environment, speech samples containing unwanted signals and background noise are removed by end point detection method. End point detection method is based on the short-term log energy and short-term zero crossing rate .Wheres(n) is the speech signal, Elog is the logarithmic short-term energy and ZCR is the short-term zero crossing rate.

Elog= Nn=1 log(s(n)2)

Elog is the logarithmic short-term energy

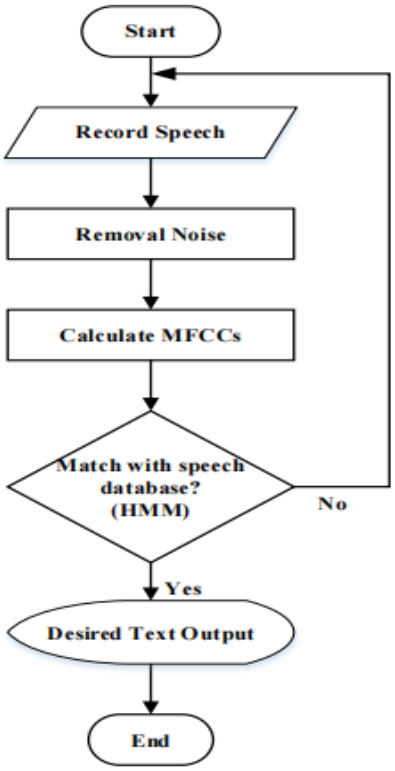

CODE GENERATION

code generation is the part of this project. In this part we converting the normal text to braille code. Hence we should know about braille code and how to convert it. This approach is made by using of python programming. First we take the equivalent value for each 26 character in braille and then how to modify it. For example for braille code:

CHARECTOR	BRAILLE	BRAILLE DOTS
a	⠁	1
b	⠃	12
c	⠉	14
d	⠙	145
e	⠑	15
1	⠼⠁	3456 1
2	⠼⠃	3456 12
3	⠼⠉	3456 14

Conversion of braille is don by the python programming part. That take the input as a normal text. All the letters in the word is separate and generate corresponding braille code like as above tabulation. Some of the example is given following.

T Take input as "ECE":

The corresponding braille dots: E-135 C-14 E-135

algorithm :

Step 1: Start the program

Step 2: Assign the values for characters.(a=1, b=12, c=14, d=145, e=15 and so on)

Step 3: get the input from user

Ex: ECE

E is checked to preassigned character, and get equivalent braille dot code

C is checked to preassigned character, and get equivalent braille dot code

E is checked to preassigned character, and get equivalent braille dot code

ForE:

For C:

For E:

1	0	1	0	1	0
1	0	1	0	1	0
1	0	0	1	1	0

Step 4: Assign the value in [1X6] dimension array value

Step 5: this output given to the Bluetooth.

Step 6: stop the program

PRINTING UNIT

The printing unit contains the Raspberry pi, camara, arduino mega,nano, buk controller, sdcard module, stepper motor. The system is controlled by arduino mega and nano. The braille embosser get the insruction and code from Raspberry pi.

Inside the printer, an electronic module encompasses a microcontroller, which processes the Braille vectors generating a buffer to control the printer head's hammers. Communication between the printer head and the microcontroller is bidirectional because it is necessary to know with accuracy the shaft's position to actuate the cam- follower mechanismsIn addition to receiving the Braille vectors from the software, the microcontroller manages the position data coming from the printer head's encoders and the embosser's sensors.

This communication is made by Bluetooth. Bluetooth works by the simple principle of sending and receiving data in the form of radio waves. Every Bluetooth enabled device has a card-like attachment known as the Bluetooth adapter. It is this Bluetooth adapter that sends and receives data. A Bluetooth adapter has a particular range of connection.

The microcontroller controls the servomotor and the two step-motors that actuate the guide rollers and the printer head moving structure. Braille standard complying dots can be effectively embossed on paper. Our current work seeks to have visually impaired readers assess the printed pages to confirm that Braille characters are tactually discernable and comfortable to the fingertips. Normally, one A4 page can contain around 1,000 characters (25 lines of 40 cells).

With our system, printing a regular text page containing most of the letters in the alphabet and spaces between words roughly takes 10 min, which amounts to six A4 pages per hour. Note that this printing speed is suitable for home purposes only.

We are currently working on debugging the microcontroller's code to handle efficiently all input and output data and the daily situations traditional printers face such as paper run out, jams, diverse alerts, etc.

TEXT TO VOICE CONVERTION

The image files can be in PNG or JPEG formats. To convert image to text, first choose the language for the text to be extracted from the language drop down list. Then click the browse button to choose the file you want to extract text from. When the text extraction is complete, the result will be added to the text box above.

They are following steps involved in text to voice conversion.

Step 1: As you will access this, the first thing to do is upload the text you wish to convert. You can either type the text in the box provided or upload the file saved on your device.

Step 2: After entering the text, you've to select the language in which you want to listen to the text. Just click on the drop-down list and select any language.

Step 3: Now, you have to choose the speed variation for the spoken words. You can choose between normal, fast, and slow speeds.

Step 4: The next step is to select the voice type in which you need the output. Our tool provides you two options, which are male and female. Both of the voices seem natural and aren't robotic.

Step 5: Lastly, you have to tap the "Convert to Speech" button. Before hitting it, you can click the "Play" button to listen to the speech.

REFERENCES:

[1] Bo Li, ; Junbiao Liu, ; Zhiping Wang, ; Guangrong Fang, (2010). [IEEE 2010 IEEE Youth Conference on Information, Computing and Telecommunications (YC-ICT) - Beijing, China (2010.11.28-2010.11.30)] 2010 IEEE Youth Conference on Information.Aiding the visually impaired, developing an effcient Braille print.

[2] Anubhav Apurva,Palash Thakur, Anupam Misra,Aiding the visually impaired, developing an effcient Braille print.

[3] Paul Blenkhorn and Gareth Evans, Automated Braille Production from Word-Processed

[4] Documents,IEEE transactions on neural systems and rehabitation engineering,VOL 9, NO. 1, march 2001.

[5] Jevri Tri Ardiansah, Yasuhisa Okazaki. The Design and Prototyping of Braille to Speech Application as a Self-Learning Support Media for Visually Impaired Person.

[6] Ardiansah JT, Tanaka H, Okazaki Y., "The Prototypes of Braille to Speech Application as a Self-Learning Support Media for Visually Impaired Person,". Japanese Society for Information and System in Education, 2019, (pp. 236-237)

[7] US Patent 4183683 A – Line Printer for the raised-dot language of Braille Characters.

DEEP LEARNING BASED DETECTION AND CATEGORIZATION OF INFANT BRAIN MRI ABNORMALITIES

V. Yogalakshmi[1], K .Kiruthika[2], S. Lakshmi Priya[3], S. Nithish[4]
[1] Associate Professor, Electronics and Communication Engineering, Rajalakshmi EngineeringCollege, Thandalam, India
[2,3,4] Electronics and Communication Engineering, Rajalakshmi EngineeringCollege, Thandalam, India

Abstract - Acoustic Resonance Imaging (MRI) is considered as a critical tool for the medical investigation of brain. The defect of the congenital brain has a distinct set of symptoms and impairments which are difficult to identify and classify with the MRI images. Studies have revealed that the rate of women with the infants of abnormal brains is increasing at a high rate. Early identification of the symptoms can help in precise diagnosis of the brain defect and helps to carry out with the effective treatment plan. The literature survey has shown the segmentation of the adult brain and not infants of month's year old. In this proposed system, steps of processes are proposed for infant brain classification which uses deep learning techniques. The significant contribution of this proposed system is to diagnose the defective brain at the early stage of the infant's brain development. The proposed system has four phases of pre-processing (filtering noise), enhancement, Feature extraction, CNN based segmentation and classification using the trained network. The constructed algorithm does the gray level conversion of the test image selected. In the pre-processing stage, removal of noise takes place and it is followed by the image enhancement using Histogram equalization filter and IM filtering. Gray Level Co-Occurrence Matrix (GLCM) function extracts the feature from the filtered image output. Convolution Neural Network (CNN) does the classification, detection and the segmentation of the image using the trained datasets. The Deep learning based classification and segmentation can improve the prediction accuracy and reduce generalization errors. The all the test image results are updated in a web page with the timestamp using an IoT module for the accurate patience's survey reporting and other further future analysis. Our future work aims at a transfer learning method in which the algorithm concentrates on automatically solving different problems from the knowledge gained while solving the previous set of problems and also improving the output efficiency using more disable data sets.

Keywords: Deeping Learning, CNN, Gray LevelCo-Occurrence Matrix, Accuracy Prediction, IOT Module.

INTRODUCTION

Automated segmentation of fine detailing of an image shows a pivotal motion in the recent image processing techniques. Image processing is widely used in medical investigations, monitoring of the delicate internal organs and it's working like knowing several series of neuropath logical variations. Approximately 3 in 1000 pregnant women give birth to infants with different types of brain abnormalities. Out of which tumors are regarded as the common brain abnormality that affects infants which develop due to the abnormal cell growth. The brain tumors in infants are termed as pediatric brain tumors. Primarily brain tumor begins when normal cells acquire errors in its DNA strands. These process errors are called mutation. The mutation of the cells causes the cells to multiple at high rates. This will in turn continue to live even when healthy cells would die. Thus this accumulation results in a mass of abnormal cells, which is termed as tumor or cancer. There exists two types of pediatric brain tumor, where some are non-cancerous cell growth (Benign) and while some are cancerous cell growth (Malignant).These can affect the functions of the nervous system

depending on the location where the tumor evolves in the brain and also its growth rate. Treatment for brain tumor in infants is typically quite different from the treatment for adults. The proper treatment and the chances of recovery depends on the type of tumor, its location inside the brain, whether it has spread or not. The early and accurate determination and examination of the tumor cells type can facilitate in deciding the appropriate treatment in dealing with the abnormality to cure the cancer effectively.

Machine learning(ML) is an emerging popular field in computer Science Engineering which has widespread applications in many other major fields like medical, electronics, industrial and automotive applications for automatic image processing pattern recognition and AI. Deep learning algorithms are inspired by the function and traits of the brain and so termed as Artificial Neural Networks. These algorithms are deployed for medical imaging and classifications to help physicians with clinical diagnosis. The brain structures and tissues have very minute variations which are difficult to trace out and our proposed system prevents human interventions based diagnostic errors.

RELATED WORK

Many researchers have done their work using computer vision & image processing to detect malicious tumors in different organs of the human body. In most cases, the development of an automatic learning model called deep learning has enabled the development of medical image analysis approaches that can exhibit remarkable accuracy rates. Manual identification of tumor presence inside the brain using MRI is highly challenging and needs more effort during examination. Manual diagnosis can lead to many human based diagnostic errors. Most of the existing works have their own challenges in handling the intensity inhomogeneity and noise in the data. The analysis of the level of correlation in the existing works has permitted to limit the features to only significant components which greatly affects the accuracy of the output. Most of the work is manual or semi-automatic segmentation and identification of pathological tissues of the brain using composite feature vectors consisting of wavelets and statistical parameters. The most classification stage is carried out by using Support Vector Machine and fuzzy c- means algorithms. Execution of these algorithms is complex, time consuming and requires a high level of computation speed.

THEORETICAL BACKGROUND

Deep Learning algorithms are prompted by the structure and functional traits of the human brain called Artificial Neural Networks (ANNs). Artificial neural network is a budding technology which got its traces from the distributed chemical signal sending communication nodes in biological systems and information processing. Though the computer based ANNs were influenced by the brain activities, it has its own differences from working of the biological brains. Deep Learning uses multiple layers called as nodes, which progressively extract the prominent higher level features from the raw input data given. Deep learning algorithms are framed in such a way that they exploit the unknown structure of the input distribution which in turn aids to provide us with good representations with the higher-level learned features extracted in terms of lower-level features provided.

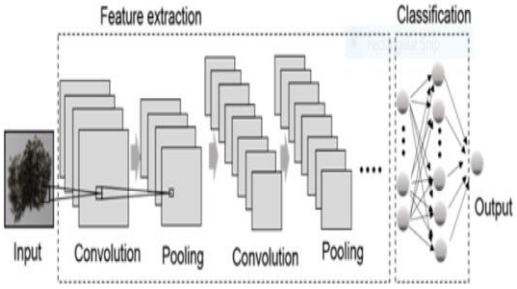

LITERATURE SURVEY

A. Generative Model for Image Segmentation Based on Label Fusion

Mert R. Sabuncu, B. T. Thomas Yeo, Koen Van Leemput, Bruce Fischl, and Polina Golland proposed label fusion algorithms can be compared in both practical and theoretical ways in the theoretical way the white matter cerebral cortex and the subcortical structure are separated manually and in the practical way the free surfer whole brain segmentation tool is used so in this way they are analyzed in both theoretical and practical ways.

B. Automatic Detection of Abnormal Brain Tissue in MR Image

Shuqian Luo and Jie Cai proposed an auto associative memory based technique which can automatically detect the abnormality of a tissue in MR images. In this the MR image will be compared with the autocorrelation of normal image vectors and in this way it can detect any abnormality. This method is a feasible technique for detecting abnormality in the MR image

C. Implementation Absolute Brain 1H-MRS Quantification Method

Matthieu Bagory, Francoise Durand-Dubief, Danielle Ibarrola, Jean-Christophe Comte, Francois Cotton, Christian Confavreux, and Dominique Sappey-Marinier proposed that the MRS will be used for measuring the cerebral metabolite so that it can help in characterizing the brain disease diagnosis. metabolite concentration qualification will be based on metabolite ratio referring to creatinine. If the metabolite concentration was assumed to be constant it may vary in pathological processes. So, absolute concentration methodology is used.

D. Brain Tissues Extraction Based on Improved Brain Extraction Tool Algorithm

Jiaqing Qiu, Wenqiang Cheng proposed a paper with a framework of BET which is a useful tool for segmenting brain tissue from MRI. The deformable model is used which fits to the brain surface by a set of model forces. The method is fast and it has more precision in segmentation. The accuracy was low in this method due to the problems in the BET algorithm.

PROPOSED ARCHITECTURE

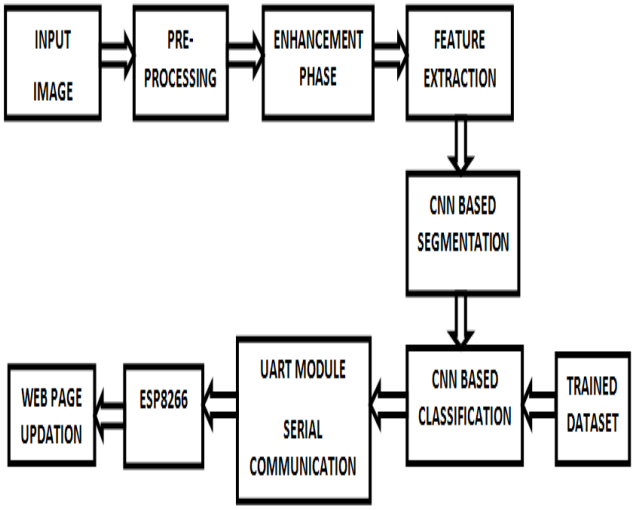

Fig. 1. Proposed system in Block diagram..

PROPOSED SYSTEM

In general manual examination of the defects in the human brain is challenging and time consuming.

In this system an efficient technique has been presented for the categorization of the infant brain abnormalities. The section presents the technique that is used in developing an

algorithm that uses Deep Learning Convolutional Neural Network (CNN) model to classify the tumor in the infant brain as Normal, Benign or Malignant. The proposed system mainly consists of 6 major phases – Pre-processing, enhancement, Feature Extraction, Segmentation, classification and instant web page updating using IoT technology through UART serial communication and Wi-Fi module. The main advantageous part of this system is that the image segmentation and Classification is done based on CNN, so that the segmentation does not require human intervention and expertise. The segments of the image are feeded as the inputs to the CNN network in the segmentation stage, which then labels out the pixels. The system is totally automatic and the processing time is very less but accurate. It throws out the output within a couple of minutes once the test image is selected. The system is user friendly and updates the result in a separate webpage along with the accurate time stamp which can be highly beneficial in remote monitoring and analysis of the tumor in different stages.

WORKING

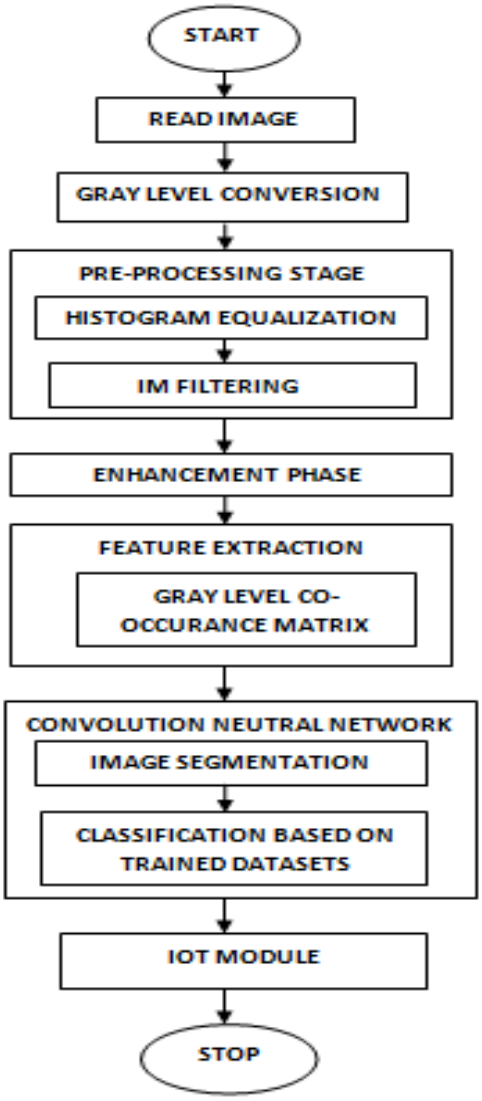

Fig. 2. Flow chart explaining the process steps.

WORKING METHODOLOGY

E. DATA ACQUISITION AND INPUT TEST IMAGE

The efficiency of the output is governed by the selection of precise and unique data sets (image). The datasets are very important in the deep learning prediction process, the more and precise the datasets, the more accurate the output of the neural network will be. The number of datasets (training images) forms the different layers of the Convolution Neural

Network (CNN). The proposed network was trained using 600 MRI Images (300 each for malignant and Benign). The proposed algorithm is tested with 50 input test MRI images of the infant brain.

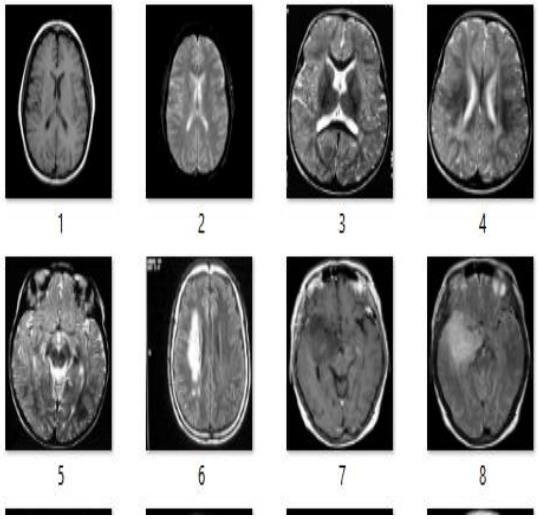

Fig. 3. Infant Brain MRI Test images for experimenting the proposed algorithm.

F. PREPROCESSING OF THE INPUT IMAGE

The improvement of the image (data) is dole out by pre-processing either by suppressing the unwilling distortions or enhancing some image options necessary for more process, though geometric transformations of pictures such as rotation, scaling, and translation are classified among pre-processing strategies here since similar techniques are used.

a) GREY LEVEL TRANSFORMATION

Grayscale or greyscale image is one within which the worth of every pixel may be a single sample representing solely associate degree quantity of light intensity, (i.e.,) it carries solely intensity data. Grayscale pictures, a form of black-and-white or grey monochrome, are composed completely of reminder grey. The distinction ranges from black at the weakest intensity to white at the strongest. At the opposite finish of the dimensions, a dark image could have high distinction if the background is considerably totally different from the individual objects at intervals of the image, or if separate areas at intervals the image have terribly totally different reflection factor properties.

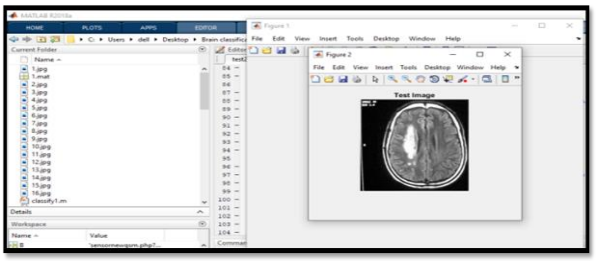

Fig. 4. Output of Gray level transformation

G. ENHANCEMENT PHASE

Image improvement or enhancement is the method of adjusting digital pictures in order that the results are additional appropriate for exhibit or additional image analysis. As an example, you'll take away noise, sharpen, or brighten an image, creating it easier to spot key features. The aim of image improvement is to boost the interpretability or perception of data in pictures for human viewers, or to supply `better' input for different automatic image process techniques

a) HISTOGRAM EQUALIZATION

Histogram effort is a digital image process technique that aims to improve distinction in images. It accomplishes this by effectively spreading out the foremost frequent intensity values, i.e. stretching out the intensity vary of the image. This technique typically increases the worldwide distinction of images once its usable information is diagrammatical by close distinction values. This permits for areas of lower native distinction to realize the next distinction. The method of adjusting intensity values is often done mechanically by exploitation bar chart equalization. bar chart effort involves reworking the intensity values

so the bar chart of the output image roughly matches such a bar chart. By default, the bar chart effort performs, haste, tries to match a flat bar chart with sixty four bits, however you'll be able to specify a unique bar chart instead.

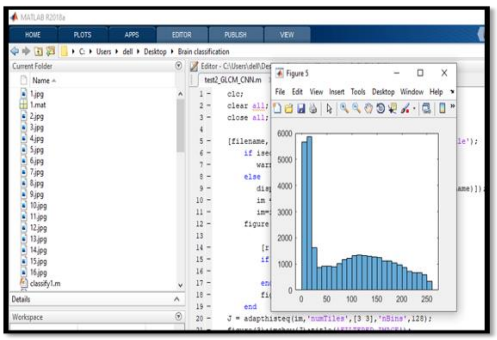

Fig.5 Plot of Histogram Equalization

b) FILTERING

In signal processing, a filter may be a device or method that removes some unwanted parts or options from an image. Filtering may be a category of signal processing, the process feature of filters being the entire or partial suppression of some facet of the signal. Most often, this implies removing some frequencies or frequency bands. Filtering may be a neighborhood operation, during which the worth of any given picture element within the output image is set by applying some algorithmic rule to the values of the picture elements within the neighborhood of the corresponding input pixel. A pixel's neighborhood is a few sets of pixels, outlined by their locations relative picture element.

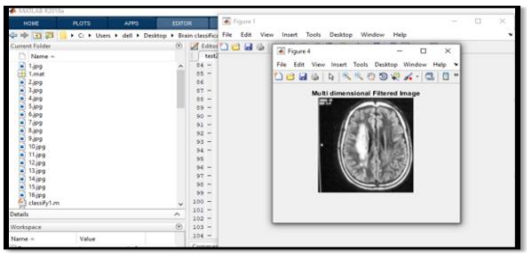

Fig6. Output of Im-filer Function

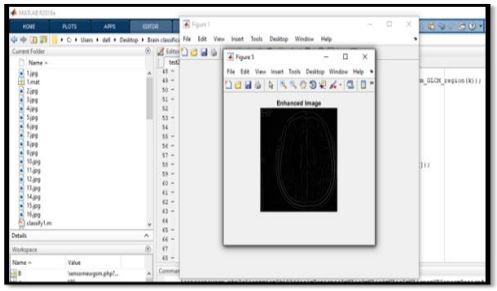

Fig7. Output of Im-Subtract

H. FEATURE EXTRACTION

In machine learning, pattern recognition and in image processing, feature extraction starts from an associate initial set of measured information and builds derived values (features)intended to be informative and non-redundant, facilitating the following learning and generalization steps, and in some cases resulting in higher human interpretations. Feature extraction is said to spatiality reduction.When the input data to associate formula is simply too massive to be processed and it's suspected to be redundant (e.g. an equivalent measuring in each feet and meters, or the repetitiousness of pictures given as pixels), then it will be remodeled into a reduced set of options (also named a feature vector). Determinative a set of the initial features is named feature choice. The chosen options are expected to contain the relevant data from the input data, so the specified task will be performed by mistreatment of this reduced illustration rather than the whole initial knowledge. Feature extraction involves reducing the quantity of resources needed to explain an outsized set of knowledge. Once playacting analysis of complicated knowledge one in all the most important issues stems from the quantity of variables concerned. Analysis with an outsized variety of variables usually needs an outsized quantity of memory and computation power, conjointly it should cause a classification formula to over fit coaching samples and generalize poorly to new samples. Feature extraction may be a

general term for strategies of constructing combos of the variables to induce around these issues whereas still describing the info with decent accuracy.

a) GREY LEVEL CO – OCCURRENCE MATRIX

A method of examining texture that considers the abstraction relationship of pixels is the gray-level co-occurrence matrix (GLCM), collectively spoken because of the gray-level abstraction dependence matrix. The GLCM functions characterize the texture of an image by scheming but usually pairs of pixels with specific values and during a mounted abstraction relationship occur in a picture, creating a GLCM, then extracting applied math measures from this matrix. (The texture filter functions, delineated in Calculate applied mathematics Measures of Texture cannot supply information concerning type, that is, the abstraction relationships of pixels in an image.) GLCM could also be created by exploitation gray co-matrix and it'll derive several statistics from them mistreatment Graycoprops. These statistics supply information concerning the texture of an image. The subsequent table lists the statistics.

Statistic	Description
Contrast	Measures the local variations in the gray-level co-occurrence matrix
Correlation	Measures the joint probability occurrence of the specified pixel pairs.
Energy	Provides the sum of squared element in GLCM. It can be also known as angular second moment or uniformity.
Homogenity	Measures the closeness of distribution of elements of GLCM in the GLCM diagonal.

Fig. 5. Statistics Of GLCM.

I. CNN BASED SEGMENTATION

Many pc vision tasks need intelligent segmentation of an image, to grasp what's within the image and alter easier analysis of every half. Today's image segmentation techniques use models of deep learning for pc vision to grasp, at a grade out of the question solely a decade past, precisely that real-world object is portrayed by every constituent of a picture. Deep learning will learn patterns in visual inputs so as to predict object categories that form up a picture. The most deep learning design used for image processing may be a Convolutional Neural Network (CNN).Image segmentation may be a vital method in pc vision. It involves dividing a visible input into segments to change image analysis. Image segmentation with CNN involves feeding segments of a picture as input to a convolutional neural network, that labels the pixels. The CNN cannot method the total image right away. It scans the image, viewing a tiny low "filter" of many pixels whenever till it's mapped the whole image.

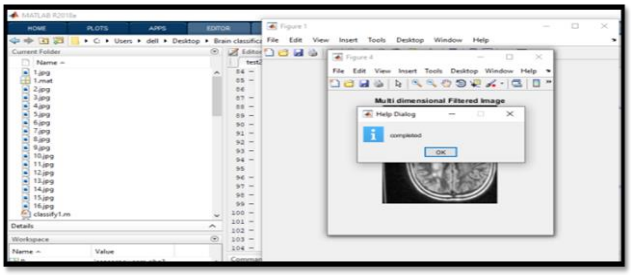

Fig8. Segmentation Completion dialog box

J. CLASSIFICATION USING CNN

The convolutional neural network (CNN) may be a category of deep learning neural networks. CNNs have an associated input layer, and output layer, and hidden layers. The hidden layers typically incorporates convolutional layers, ReLU layers, pooling layers, and fully connected layers

- Convolutional layers apply a convolution operation to the input. This passes the data on to the following layer.
- Pooling combines the outputs of clusters of nerve cells into one neuron within the next layer.
- Fully connected layers connect each nerve cell in one layer to each nerve cell within the next layer.

In a convolutional layer, neurons solely receive input from a subarea of the previous layer. during an absolutely connected layer, every nerve cell receives input from each part of the previous layer. A CNN works by extracting options from pictures. This eliminates the necessity for manual feature extraction. The options don't seem to be trained! They're learned whereas the network trains on a collection of pictures. This makes deep learning models very correct for pc vision tasks. CNNs learn feature detection through tens or many hidden layers. every layer will increase the quality of the learned options.

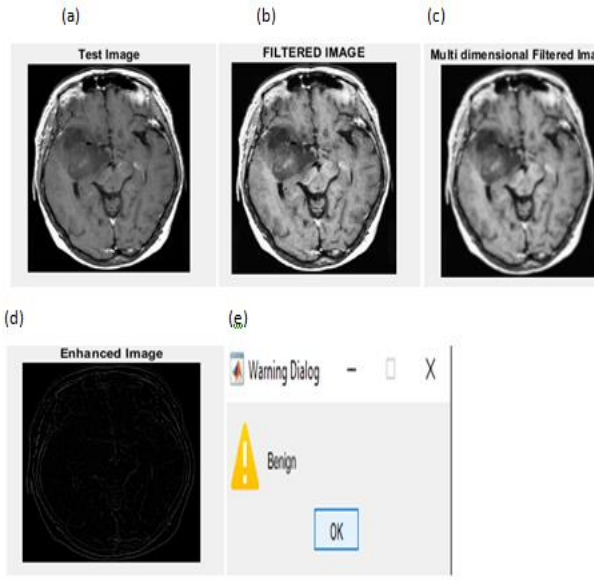

Fig9. Steps in the implementation of the proposed algorithm .

(a) Test image. (b) Filtered image after histogram equalization. (c) Multi-dimensional filtered image after IM Filtering. (d) Enhancement output. (e) Output after CNN Classification.

K. INTERFACING OF IOT MODULE

The result obtained from the algorithm is updated in a web page for future references. The RC 232 connector and IC MAX 232 establish serial communication between PC and microcontroller. Connection is given between the ground and Vcc of the IC MAX 232 and ESP8266 IoT module which updates the data to the webpage through WiFi communication.

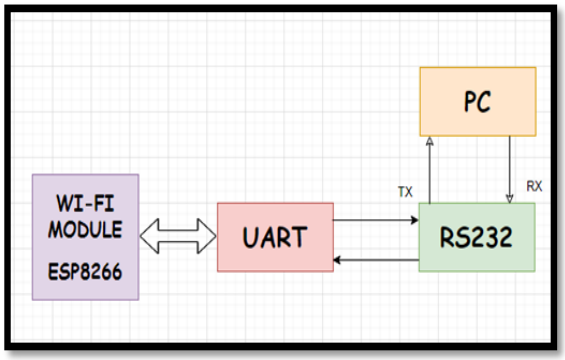

Fig10.Interfacing Architecture

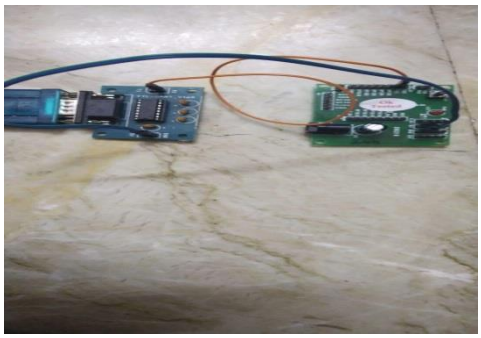

Fig11. Hardware IoT Modules for Data Transfer

RESULT AND DISCUSSION

In this proposed paper, a methodology has been provided for infant Brain MRI detection which effectively uses Deep learning classification techniques. The proposed

network was trained using 600 MRI images (300 each for malignant and benign). The result of the system along with the accurate time stamp is automatically updated in the webpage for remote monitoring using an IoT module which uses ESP8266 WiFi for Data transferring.

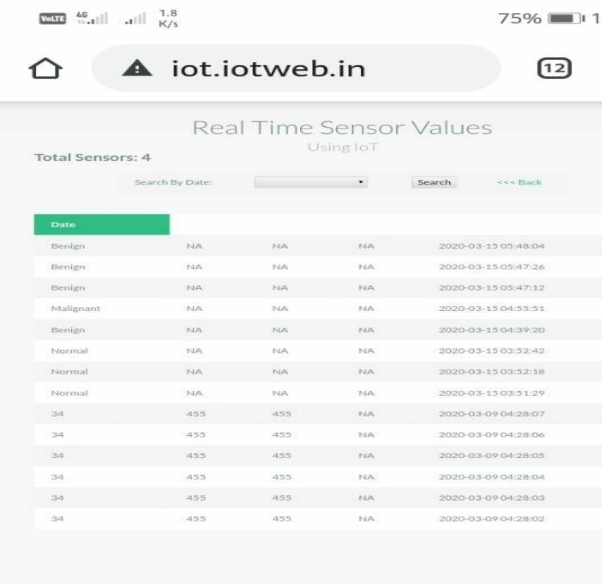

Fig.12. Results updated in the webpage

The performance of this classification method can be measured by calculating its Accuracy (Acc) and Precision (Pre). For evaluating the classification Model using the metrics derived outcomes of the model needs to be considered. We include three outcomes termed as True Positive (TP), False Negative (FN) and False Positive (FP), as shown in the TABLE 1.

TP is an outcome value where the model accurately predicts the class – Positive. FP is an outcome value where the model incorrectly predicts the class- Positive and FN incorrectly predicts the class- Negative.

TABLE I. CALCULATION OF ACCURACY AND PRECISION FROM THE OUTCOME

Outcome Of the Model	**Values Of the Outcome**
TP	**74**
FP	**4**
FN	**8**

We consider two metrics for analyzing the performance of this model. Accuracy (Acc) is one metric widely used for evaluating the models used for classification. Informally, Accis the fraction of predictions, which our model got right.Pre is another metric which refers to the closeness between the two or more measurements to each other.

$$Accuracy(Acc) = \left(\frac{TP}{TP + FN}\right) * 100 \quad (1)$$

$$Precision(Pre) = \left(\frac{TP}{TP + FP}\right) * 100 \quad (2)$$

TABLE II. cnn accuracy result of our proposed system compared with the existing methods

METHODS	ACCURACY *(Acc)*		PRECISION *(Pre)*
	SVM	CNN	
EXISTING	83.3%	86.4%	90.921 %
PROPOSED	90.361 %		94.936 %

From the results calculated from table 2, our proposed system has better accuracy (Acc) and precision (Pre) values. The accuracy is achieved to 90.3 % (90 correct predictions out of 100 total examples) which is high compare

to the other existing methods of SVM and CNN which is

83.3% and 86.4% respectively. Our model reaches a precision of 94.9% in other words when it predicts a tumor, it is correct 90 of the time.

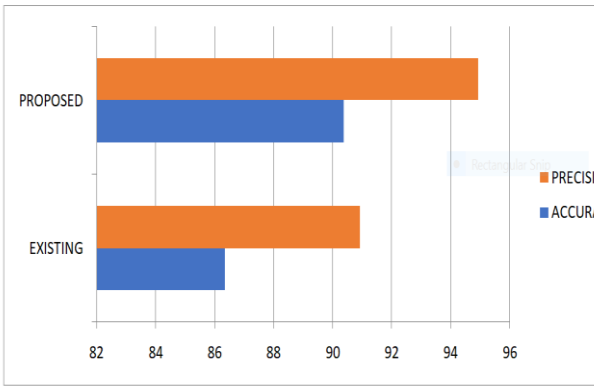

Fig.13. Graph comparing the efficiency of the existing and proposed system.

CONCLUSION

An efficient method for categorizing and detection of brain abnormalities in infants has been proposed. The major contribution of this proposed paper is the CNN based segmentation and classification which is a well-established deep learning technology. The method has achieved a high rate of accuracy and efficiency using simple implementation and low computational cost. The working efficiency of our method has been compared with the other methods of segmentation and classification. The results displayed that this method of categoriza tion outperform most of the other existing methods of classification and the results are promising. The future work will be focusing on the performance of the algorithm by increasing the more unique datasets and making the network transfer learning which is self learned by storing the knowledge acquired by solving previous problems which automatically deepens the layers of the neural network.

REFERENCE

[1] "Use of MRI in the diagnosis of fetal brain abnormalities in utero (MERIDIAN): a multicenter, prospective cohort study. - PubMed - NCBI." [Online]. Available: https://www.ncbi.nlm.nih.gov/pubmed/27988140. [Accessed: 25-Aug-2018].

[2] M. Havaei et al., "Brain tumor segmentation with Deep Neural Networks," Med. Image Anal., vol. 35, pp. 18–31, Jan. 2017.

[3] AL ansari et al., "Automatic Brain Localization in Fetal MRI Using Superpixel Graphs," in Machine Learning Meets Medical Imaging, 2015, pp. 13–22.

[4] K. E. al et, "Fetal brain anomalies detection during the first trimester: expanding the scope of antenatal sonography. - PubMed - NCBI." [Online]. Available: https://www.ncbi.nlm.nih.gov/pubmed/28282781. [Accessed: 25-Aug-2018].

[5] B. J. Erickson, P. Korfiatis, Z. Akkus, and T. L. Kline, "Machine Learning for Medical Imaging," Radiographics, vol. 37, no. 2, pp. 505–515, Mar. 2017

[6] M. S. Hosseini and M. Zekri, "Review of Medical Image Classification using the Adaptive Neuro-Fuzzy Inference System," J. Med. Signals Sens., vol. 2, no. 1, pp. 49–60, 2012.

[7] A. Makropoulos, S. J. Counsell, and D. Rueckert, "A review on automatic fetal and neonatal brain MRI segmentation," NeuroImage, Jun. 2017.

[8] J. Levman and E. Takahashi, "Multivariate analyses applied to fetal, neonatal and pediatric MRI of neurodevelopmental disorders," NeuroImageClin., vol. 9, pp. 532–544, Jan. 2015.

[9] M. Sanz-Cortes et al., "Automatic Quantitative MRI Texture Analysis in Small-for-Gestational-Age Fetuses Discriminates Abnormal Neonatal Neurobehavior," PLOS ONE, vol. 8, no. 7, p. e69595, Jul. 2013.

[10] G. Ball et al., "Machine-learning to characterise neonatal functional connectivity in the preterm brain," Neuroimage, vol. 124, no.Pt A, pp. 267–275, Jan. 2016.

[11] C. D. Smyser et al., "Prediction of brain maturity in infants using machine-learning algorithms," NeuroImage, vol. 136, p. 1, Aug. 2016.

[12] "Early prediction of cognitive deficits in very preterm infants using functional connectome data in an artificial neural network framework," NeuroImageClin., vol. 18, pp. 290–297, Jan. 2018.

[13] Y. Jin et al., "Identification of Infants at High-Risk for Autism Spectrum Disorder Using MultiparameterMultiscale White Matter Connectivity Networks," Hum. Brain Mapp., vol. 36, no. 12, pp. 4880–4896, Dec. 2015.

[14] D. Bradley and G. Roth, "Adaptive Thresholding using the Integral Image," J. Graph. Tools, vol. 12, no. 2, pp. 13–21, Jan. 2007.

[15] P. Soille, Morphological Image Analysis. Berlin, Heidelberg: Springer Berlin Heidelberg, 2004.

[16] F. Meyer, SIGNAL PROCESSING Topographic distance and watershed lines. 1993.

[17] S. S. Pathak, P. Dahiwale, and G. Padole, "A combined effect of local and global method for contrast image enhancement," in 2015 IEEE International Conference on Engineering and Technology (ICETECH), 2015, pp. 1–5.

[20] S. G. MALLAT, "A Theory for Multiresolution Signal Decomposition: The Wavelet Representation," p. 20.

[18] V. Anitha and S. Murugavalli, "Brain tumour classification using two-tier classifiers with adaptive segmentation technique," IET Comput.Vis., vol. 10, no. 1, pp. 9–17, 2016.

[19] R. M. Haralick, K. Shanmugam, and I. Dinstein, "Textural Features for Image Classification," IEEE Trans. Syst. Man Cybern., vol. SMC-3, no. 6, pp. 610–621, Nov. 1973.

[20] F. Albregtsen, "Statistical Texture Measures Computed from Gray Level Co Occurrence Matrices," p. 14. [24] K. Fukunaga, Introduction to Statistical Pattern Recognition (2Nd Ed.). San Diego, CA, USA: Academic Press Professional, Inc., 1990.

[21] Shuqian Luo, Jie, "Automatic Detection of Abnormal Brain Tissue in MR Image" Med. Image Anal., vol. 30, pp. 18–31, Jan. 2014

[22] Mert R. Sabuncu, B. T. Thomas Yeo, Koen Van Leemput, Bruce Fischl Polina Golland, "Generative Model for Image Segmentation Based on Label Fusion" IET Comput. Vis., vol. 10, no. 1, pp. 9–17, 2008.

[23] Matthieu Bagory, Francoise Durand-Dubief, Danielle Ibarrola, Jean-Christophe Comte, Franc¸oi, "Implementation Absolute Brain 1H-MRS Quantification Method" in 2014, IEEE International Conference on Engineering and Technology (ICETECH).

[24] Jiaqing Qiu, Wenqiang Cheng, "Brain Tissues Extraction Based on Improved Brain Extraction Tool Algorithm" in IEEE International Conference on Engineering and Technology (ICETECH), pp. 1–5.

[25] Bjoern H. Menze y, Andras Jakaby, Stefan Bauery, Jayashree Kalpathy-Cramery, "The Multimodal Brain Tumor Image Segmentation Benchmark" Radiographics, vol. 38, no. 2, pp. 505–515, Mar. 2018

Deficiency-Resilient Distributed Detection and Estimation over a SW-WSN using LCMV Beamforming

P. Abinaya[1], P. Anitha[2], B. kirubalini[3]
[1,2,3] B.E Computer Science and Engineering, MRK Institute of Technology
Katumannarkoil- 608 301,Tamilnadu.

Abstract - A Latest inovation headway has brought about idealistic view towards the practicability of remote sensor organization (WSN's) with regard to Internet of things (IOT) and Cyber actual system (CPS).Be that as it may to understand their full advantage in a wide scope of business applications there are as yet numerous specialized hitches that should be survived.In this paper we address three vital technical issues in a WSN:1) Distributed event Detection, 2) Distributed parameter Estimation and 3) Network Robustness. we make use of recent developments in social network called small world WSN (SW-WSN) . In particular , a small world WSN has been developed by mounting antenna arrays on sensor nodes for the purpose of Beamforming. A low complexity optimizations problem for Beamforming is formulated by introducing a new parameters flow between node pairs. Additionally, a new beamforming algorithm is also proposed which optimize this flow, leading to optimal beam parameters. The proposed method yield a lower average path length and a higher average clustering coefficient of the network. Experiments are conducted using simulations and real node deployment over a WSN test bed. Analysis and experimental results obtained demonstrate that the proposed SW-WSN model archives faster coveragence rates for both distributed Detection and distributed Estimation while being resilient to node failures when compared to results obtained using state-of-the-art methods.

Keywords: Small world wireless sensor networks (SW-WSN)., Small world characteristics (SWC), beamforming, distributed event Detection, parameters Estimation and Robustness.

INTRODUCTION

Wireless sensor Network are responsible for various sensing and control task in IOT Internet of things, Cyber Physical System (CPS) and Context aware pervasive system. WSN involves measurements and computational units distributed geographically to monitor the environment in their proximity. WSN serve as a bridge between physical and cyber world and find application in industrial automation,smart homes , smart agriculture, video surveillance, traffic monitoring, smart health care and smart energy.

Many applications of WSN's involve distributed signal processing,including soil moisture Estimation in a farm,forest fire detection, Industrial monitoring, wireless multimedia transmission and noise level Estimation in a dense populated area. Therefore distributed signal processing using WSN has received much attention in recent years. The Two main division of distributed processing is distributed Detection and distributed Estimation. Distributed Detection involves consensus in the network for an event Detection in a distributed manners.

It utilize the data of neighbouring nodes to reach consensus in the network. Similarly, distributed Estimation involves Estimation of a vector of parameters at every node using measurement of neighbouring nodes. Distributed Estimation schemes are classified into incremental and diffusion methods.The Requirements of cyclic paths in network renders the incremental method in mnay practical sceneries useless. The diffusion

method,on the other hand, allows communication of a node with its neighbours, thus practically more feasible.

This paper is concerned only with the diffusion Estimation method.Along with distributed processing reliability is another important aspects of WSNs. Critical applications of WSNs demand the network to be realible, Reliability of a network greatly depends on the robustness of the network to node failure. Different metrics such as K-connectivity and partial k-Connectivity has been proposed in the literature to assess Robustness of a network.

Numerous method have been proposed to address the aforementioned problems in WSNs. In iterative distributed Detection is proposed to improve consensus for events Detection. In, it has been found that the network topology has a major influence on the performance of distributed processing. The more well connected the networks is, the better it's consenses performance can be achieved. A systamatic study is performed to analyze performance of network topology in distributed Estimation, These method involves introduction of small world phenomenona to improve the network performance. The small world phenomenona were discovered in social network by Stanley Milgram. It revealed that the human society in a small world network having short path lengths.

RELATED RESEARCH

In recent years,with the emergency of wireless sensor networks and ad hoc network,research on distributed signal processing algorithm has drawn significant attention. In an earlier work,the problem finding the maximum like hood estimator of a commonly observed model based on data collected by a sensor networks is addressed. In the content of distributed Detection,various work have been carried out.In an earlier work,the Detection problem is addressed jointly with system resources constraints. In an algorithm for ultrafast consensus is proposed which studies the convergence of the differential equation.

Robustness towards node failure is another challenging problem in WSN. strong Robustness enhance the network life time and quality of service.In order to address a problem of Robustness,various method have been investigate in literature.

I. Network model and Problem formulation.

A .Network Model

In this work we have mainly on a static network.However graph networks G can be considered as both static networks and dynamic networks.In case of dynamic networks,a graph G can be recognized as a snap shot series of static graph G1, G2, G3.....,GT.at corresponding time instant.Moreover,it is assumed that the change in network topology is slow enough so that the time varying sensor networks graph G Can be recognized as snap shot series of static graphs at corresponding time instants for the development of SW-WSN.All the sensor nodes are uniformly distributed over a 2-dimensional geographical area of length L and Width W.

B. Problem formulation

In this section,problem formulation of distributed detection is discussed first.Subsequently,Problem formulation foe distributed parameters estimated is described 1) Detection Problem, 2) Estimation Problem,

Deficiency-Resilient

Distributed Detection and Estimation over a Small world WSNs.

In this section,the introduction of small world characteristics (SWC) using directional

beamforming is discussed first subsequenly.LCMV beamforming leading to higher neighbourhood connectivity for sensor nodes is described.LCMV beamforming exercises a radio area contraint on sensor nodes leading to power efficient Small world WSN(SW-WSN) development is also discussed in this section.The traffic flow optimizations algorithm for SW-WSN development also discussed in this section.The traffic flow optimization algorithm leads to low complexity SW-WSN development with optimal SWC. Finally,The algorithm development for fault-resilient distributed Detection and Estimation over SW-WSN is presented.

A. Introduction of SWC using Directional beamforming.

B. LCMV Beamforming for Neighborhood Connectivity.

C. A Low-Complexity small world WSN Development using traffic flow optimizations.

Performance Evaluations

Performance evaluation of the proposed method is carried out using simulation and real node deployment over a WSN test bed. Detection and Estimation performance along with network Robustness performance are evaluated over a both the data sets. Resilience of the network is analyzed through K-connectivity to highlight the applicability of the proposed method in practices. Performance of the proposed method is compared with the existing betweeness centality method and bio inspired clustering method. In addition, The complexity of proposed method is also investigated to illustrate their significance in real time application.

A. Experimental setups

1) Simulated WSN.

2) Real Node Deployment over a WSN Test bed.

B.Analysis of small worldness.

C. Performance Analysis of Distributed Detection.

D. Performance Analysis of Distributed Estimation.

E) Network Resilience Analysis.

F) Complexity Analysis of traffic flow Optimization Method.

CONCLUSION

In this paper, novel methods of distributed Detection and distributed Estimation over a SW-WSN have been proposed. This method utilize traffic flow between node pairs and result in a robust and low complexity SW-WSN development. A Nival LCMV Beamforming technique is used for the introduction of SWC in the network. LCMV Beamforming increase the Feasability of network utilization in real time application. Experimental results are obtained over both computer simulated WSN and real WSN test bed. Results obtained using the proposed method are compared with existing method in literature, namely the betweenness Centrality and bio inspired clustering method. To conclude, significant improvements over distributed Detection, distributed Estimation and network Robustness are obtained utilizing the proposed method when compared to two existing methods. Mounting an antenna array on a node generally increase the hardware complexity of the node.

REFERENCES

[1] Z. Chu, F. Zhou, Z. Zhu, R. Q. Hu, and P. Xiao, "Wireless powered sensor networks for internet of things:Maximum through put and optimal power allocation".

[2] C. Chen, J.Yan,.N.Lu, Y. Wang, X. Yang and, X. Guan., "Ubiquitous monitoring for cyber physical system over relay-assisted wireless sensor networks".

[3] M. Li and He. J. Link, " Design and implementation of smart home control system based on wireless sensor networks and power line communication".
[4] A-J.Garcia-sanchez, F. Garcia-Haro, "Wireless sensor networks deployment for integrating vedio servaillence and data monitoring in precision agriculture over distributed crops".
[5] S. Gandham, R. C. prasad, A. R. singh, N. Yadav, K. Deen, and V. S. Malhotra, "High availability of collectors of traffic reported by network sensor".
[6] O. salem, A. Serhrouchni, A. Malhotra and R. Boutaba, " Event Detection in wireless body area networks using kalman filter band power divergence ".
[7] M. Erol-Kantarchi and H. T. Mouftah, " Wireless sensor networks for cost-efficient residential energy management in the smart grid ".
[8]A. Dogandriz and B. Zhang, " Distributed Estimation and Detection for sensor networks using hidden Markov random field models.
[9] A. Bertrand, "Distributed signal processing for wireless ECG sensor networks".
[10] J. Guo, U. Rogers, X. Li and He. Chen, " Secrecy constrained distributed Detection in sensor networks ".

Design and Implementation of Safe Drive for Electrical Vehicle with IOT

S.Ramarajan[1],M.Iswarya[2], R.Roshini[3], R.Santhoshini[4]
[1] Assistant professor, Department of ECE, Kings College of Engineering, Punalkulam, Pudukkottai
[2,3,4] Students, Department of ECE, Kings College of Engineering, Punalkulam, Pudukkottai

Abstract - In the upgrading countries accident is the major cause of death. If we talk about dangerous roads in the world then all of them are mountain roads and curve roads. The intensity of the deaths is more in curved roads. In the mountain roads there will be narrow roads with tight curves. In such kinds of situations the driver of a vehicle cannot see vehicles coming from other side. Because of this problem thousands of people lose their lives each year. While we are talking about mountain roads here other side might be lead to a cliff. The solution for this problem is alerting driver about the vehicle coming from other side. One of the solutions is proposed in this paper and additionally set electrical vehicle parameter checking (spark, vehicle emission smoke, object and vibration). Sensor is reached threshold value then corresponding output device (alarm, IR ray Emission, and ignition) activated for security purpose. RF communication module used for crowded area detection purpose. Electrical vehicle reach crowded area (school, college, bus stand.etc.) automatically vehicle. Speed is low. In this system reduced 90 % of accident. Sensor data is stored in IOT server It is easy to understand the pattern using the Dashboard Controller interface is implemented using the MQTT protocol. In this project used for BLYNK web server.

Keywords: Iot, Arduino, LCD Display, IR Rays Emission, Vehicle Emission smoke Monitor Sensor

INTRODUCTION

Electrical vehicle system has become part of people's lives. These automobiles bring convenience and ease to our lives for easy mobility from places to other places; go work, parents bring kids to school without getting late, in emergency situations where a transport mean is needed to go urgently to hospital, for vacation trips and other daily activities. However, many problems also arise, such as traffic congestions and accidents. An Electrical vehicle aims at assisting its driver with easier driving, less workload and less chance of getting injured. Smart car must be aware of the environment, which means sensing and recognizing the context around the car and the driver. Context-awareness is the key feature of a Electrical vehicle system for safer and easier driving. Driver monitoring system, almost 95% of the accidents are due to human factors and in most cases human behavior is solely to blame. Electrical vehicle system is present promising potentials to assist drivers in improving their situational awareness and reducing errors. Physiological sensors can detect whether the driver is fit for driving.

EXISTING SYSTEM:

In existing system, they proposed an in vehicle safety aided system, which adopts DC power line communication (DC PLC) as main transmission channel. The system is a composed of a voice-to –text(VVD) the module , two embedded computer module,two DC PLC transeceiver modules, a text and video message and display module, and a distance measurement module. Moreover the proposed system is successfully installed and tested in real vehicle .The experimental results showed proposed system can have a data of distance to the adjacent real vehicle, and display front view video with alerting messages for drivers of real vehicles.

As a result system can be applied to alert drivers of real vehicle to achieve the propose of road safety.

Draw Backs of Existing System:

- ✓ In existing system used for electrical vehicle moving control door operation control and air bag balloon operation only.
- ✓ Not available of iot things based sensors monitor
- ✓ Not available for security sensor.
- ✓ Not available for maintain area security system.

Proposed System:

The proposed is to design a smart device used to provide a safe drive for electrical vehicles by using iot. It consist of arduino IDE 1.8.13, tilt sensor, ultrasonic sensor, vehicle emission smoke monitor, spark sensor, and LCD display.

Working:

In this project is used for arduino micro controller, ESP8266 Module, CO2 emission monitor sensor, Tilt sensor, object sensor, spark sensor and relay with driver circuit. MQ2 sensor (CO2 emission monitor) is connected to arduino pin A0. This sensor sensed bicycle silencer smoke information and send to arduino controller. Spark sensor sensed electrical parameter sparking condition and then that value send to controller. This spark sensor connects to arduino pin A1. Tilt sensor connects to arduino pin A2. This tilt sensor sensed electrical vehicle slope status and then this value send to controller. RF receiver connects to arduino pin A4, A5. This RF receiver received RF signal from RF transmitter for crowded condition checking purpose. In additionally this system received area information. Our electrical vehicle reached this crowded area then automatically vehicle speed varied.

IR Rays emission device emit IR rays continuously. Mountain area security system sensor received this IR ray's signal for vehicle movement checking condition for security purpose. Alarm unit connect to arduino pin 12. Any sensor sensed abnormal condition immediately controller activate

Block Diagram:

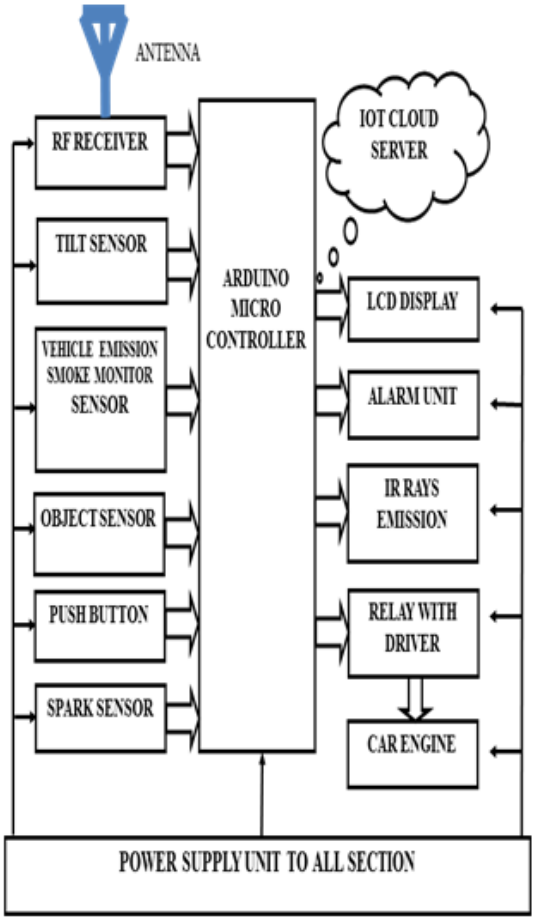

Ultrasonic Sensor:

Ultrasonic sensor emitting sound waves and converts the reflected sound into an electrical signal. The speed of audible sound. Ultrasonic sensor sensed object distance monitor purposed and control breaking system depend upon ultrasonic sensor value.

Tilt Sensor:

Tilt sensor produces an electrical signal which is proportional to the degree of tilt in multiple axis .A sensor converts stimuli such as heat, light, sound and motion into electrical signals .These signals are passed through an interface that converts them into a binary code and passes this on to a computer to be processed . Tilt sensor is used for accidentals statues checking purpose

LCD Display:

Liquid Crystal Display it is a flat panel display or electronically modulated optical device. LCD is commonly used in TVs and computer monitors. It is also used in screens for mobile devices and smart phones.

Arduino Microcontroller:

Arduino boards are able to read inputs-light on a sensor and turn it into an output- activating a motor, turning on a led. Arduino Microcontroller are pre-programmed with a boot load that simplifies uploading of programs to the on chip flash memory.

Hardware Required:

- ARDUINO Controller
- LCD Display
- Power supply unit
- Mobile phone with Android application
- Computer
- Ultrasonic sensor
- Tilt Sensor
- Engine Condition Monitor Sensor
- Buzzer
- DC motor
- Push button
- LDR sensor
- RF module

Software Required:

- ARDUINO-1.8.13 IDE
- EMBEDDED C PROGRAM
- PROTEUS SIMULATION

Advantages:

- Low power consumption
- Reliability
- Compatible size
- Easy to handle

- Long distance coverage's
- Simple design

Application :

- It is used to all type of vehicle application
- It is used to commercial equipment
- It is used to traffic department

Conclusion

Electrical vehicle are a promising domain of ubiquitous computing, and have been subjected to comprehensive researches and greater attention. This paper attempts to build a electrical vehicle from the view of context awareness. Our contributions are threefold: (a) modeling of context-aware the architecture of electrical vehicle. (b) A three-layered context model is proposed to represent a complex driving environment. (c) The implementation of a electrical vehicle prototype including its hardware requirements and software platform, to service the context awareness system. Our future work includes application of heuristic approaches on the classifiers and more innovative sensing technologies to detect physiological behaviors of the driver. More focus on the driver prediction behavior will be made.

REFERENCE

[1] W. Al-Khater, S. Kunhoth and S. Al-maadeed,"A review on Radio Frequency Identification methods," 2017 13th International Wireless Communications and Mobile Computing Conference (IWCMC), Valen- cia, 2017, pp. 1751-1758.

[2] N. Chadil, A. Russameesawang and P. Keeratiwintakorn, "Real-time tracking management system using GPS, GPRS and Google earth," 2008 5th International Conference on Electrical Engineering/Electronics, Computer, Telecommunications and Information Technology, Krabi, 2008, pp. 393-396.

[3] Khawas, Chunnu and Shah, Pritam. (2018). Application of Firebase in Android App Development-A Study. International Journal of Computer Applications. 179. 49-53. 10.5120/ijca2018917200.

Design and implemtation of border security System in military field

S.Sivakumar[1], Mr.B.Melvin charles[2], V.Sathya[3], G.Surya [4]
[1] Assistant professor, Department of ECE, Kings College of Engineering, Punalkulam, Pudukkottai
[2,3,4] UG Scholar, Department of ECE, Kings College of Engineering, Punalkulam, Pudukkottai

Abstract - India is a country whose economy is developing very fast. Unfortunately, the threat of terrorism in India is very large, therefore it requires a smart system such as military robots. A sophisticated military robot is a robot that is needed by the military/police because it can be deployed to the battlefield or the eradication of terrorism in a remote or autonomous manner. War robots clearly hold tremendous advantages from saving the lives of our own soldiers, to safely defusing roadside bombs, to operating in inaccessible and dangerous environments such as mountainside caves and underwater. Without emotions and other liabilities on the battlefield, they could conduct warfare more ethically and effectively than human soldiers who are susceptible to overreactions, anger, vengeance, fatigue, low morale, and so on. But the use of robots, especially autonomous ones, raises a host of ethical and risk issues. This paper offers a survey of such emerging issues in this new but rapidly advancing area of technology.In this paper, we propose a prototype of a tank-based military robot with object detection and tracking and turrets for simulation of shooting the enemy target.The methods explained, and experimental results were presented.

INTRODUCTION

Embedded systems are designed to do some specific task, rather than be a general-purpose computer for multiple tasks. Some also have real time performance constraints that must be met, for reason such as safety and usability; others may have low or no performance requirements, allowing the system hardware to be simplified to reduce costs. Wireless communication has become an important feature for commercial products and a popular research topic within the last ten years. There are now more mobile phone subscriptions than wired-line subscriptions. Lately, one area of commercial interest has been low-cost, low power, and short-distance wireless communication used for personal wireless networks." Technology advancements are providing smaller and more cost effective devices for integrating computational processing, wireless communication, and a host of other functionalities Wireless spy camera Robot projects main functionality is deal with tough situations where human beings cannot handle situations like bomb disposal, narrow and small places…etc. This system works using a computer controlled system trough which is done using electronic programming. Using camera attached to robot we can view location where the robot is using this video we can wireless control and know location details. Robotics is the branch of mechanical engineering, electrical engineering and computer science that deals with the design, construction, operation and application of robotics, as well as computer systems for their control, sensory feedback and information processing. The aim of developing a high-tech technology serves the purpose of achieving high speed technology, advanced capacity to control the robots and to device new methods of control theory. The realization of above standards some technical improvement along with the need of high performance robot is required to create a faster, reliable, accurate and more intelligent robot which can be devised by advanced control algorithm, robot control devices and

new drivers. The design of our project encourages developing a robotic vehicle based on Bluetooth technology[1] for the remote operation connected with the wireless camera mounted on the robot for monitoring purpose.

METHODOLOGY:

In this proposed system, Arduino Uno controller is used which is interconnected with LCD, metal sensor, camera, IR sensor, Bluetooth module, buzzer and Relay with Motor.Every process will be handled and controlled by microcontroller. Field instruments used to find object movement, landmines. Object sensor is used to sense the distance of opposite object for security purpose. If any problem occurs, the robot will automatically stop by braking system and alarm unit activate for indication purpose. Movement of Robot is controlled by wireless control key. LCD Display is used for visible of system information.

WORKING PRINCIPLE:

In this project, three IR sensors are used and these sensors are fit in center, right, left position of robot in front side which are used for human, object detection. Laser gun moved depends upon the signal received from IR sensors. If any object detected by IR sensors, corresponding signal sent to the micro controller. Then the controller automatically operate the laser gun which is depends on the IR sensors. WIFI camera is used for live video streaming purpose. Mode key is used for set manual or automatic mode. Three IR sensors are connected to the arduino controller pin 10,11,12 respectively. Metal sensor is used for detecting the landmines. If landmines detected, automatically the signal sent to controller which immediately stop robotic vehicle and then activate alarm unit. Robotic vehicle moved forward, reversed, left, right depends upon mobile phone control key with the help of Bluetooth communication. All section can be operated by battery power.

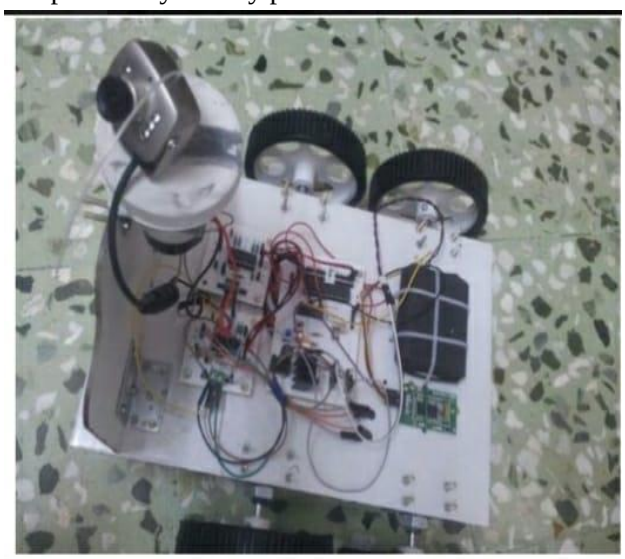

Fig. War Field Robot with Wireless Night vision Camera

BLOCK DIAGRAM:

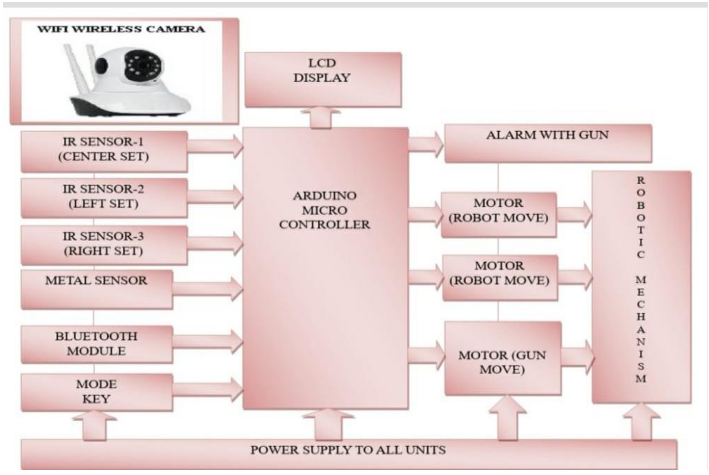

CIRCUIT DIAGRAM:

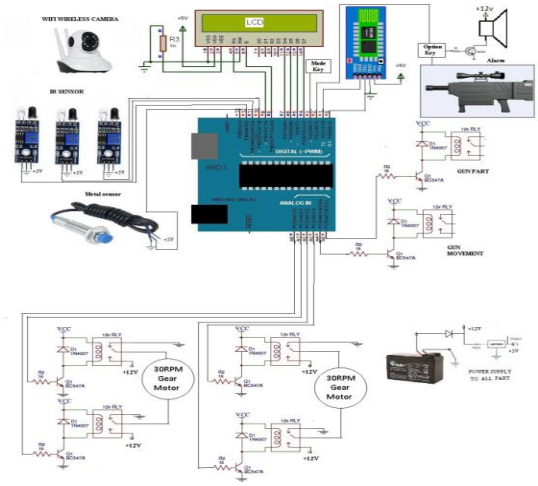

Bluetooth Module HC-05 [6, 7] :

The bluetooth module HC-05 consists of six pins. The six pins are Key,5V,GND,Tx,Rx,Status. The bluetooth module has two devices i) master device ii) slave device. One device connects to the master while the other device connects to the slave. The connection between the devices takes place as follows:

• One of the pin Tx is connected to pin Rx of the arduino board while the pin Rx of bluetooth module is connected
to the Tx pin of arduino. Thus, in a way cross-connection is required for the operation of Bluetooth module. The GND pin is given to the GND pin of arduino and power supply pin of arduino is given to the pin of power.

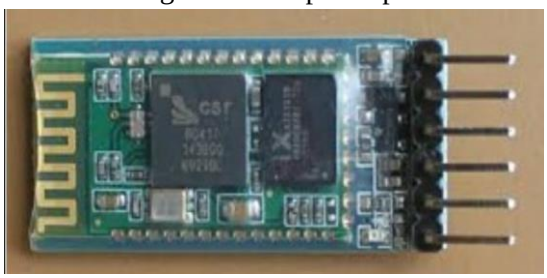

Bluetooth Connection with Arduino:

The bluetooth module HC-05 is connected with arduino board with Rx and Tx pins connected with the Tx and Rx pins of arduino board i.e. Cross –Connection. [2,4]

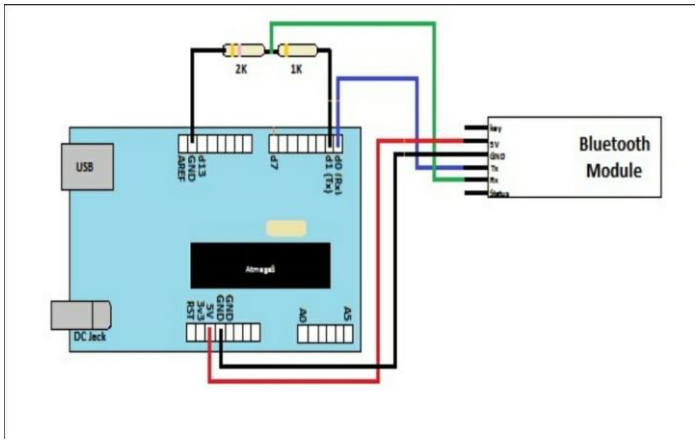

Fig. Bluetooth connection with arduino

Metal sensor:

A proximity sensor is a sensor able to detect the presence of nearby objects without any physical contact. The object being sensed is often referred to as the proximity sensor's target. Different proximity sensor targets demand different sensors. A proximity sensor often emits an electromagnetic field or a beam of electromagnetic radiation (infrared, for instance), and looks for changes in the field or return signal.

Infrared Sensor:

Infrared (IR) sensor which is used the find the target in the battlefield as the wavelength range from 0.74 µm and extended appropriately to 300 µm. Its frequency range 1 to 400Hz and include most of the thermal radiation emitted by objects near room temperature. They change their rotational-vibration movements when the IR light is typically emitted or absorbed by molecules.

Relay:

A relay is an electrically operated switch. To operate a switching mechanism mechanically, many relays use an electromagnet. To control

a circuit by a low-power signal relays are used where it is necessary or one signal control the several circuits.

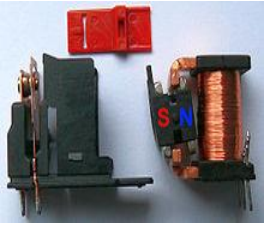

Buzzer:

The buzzer has a coil inside which oscillates a metal plate against another when given voltage difference produces sound of a predefined frequency therefore it is said to be electromagnetic type audio signalling device. In many appliances, you able to hear the BEEP sound which is the sound of buzzer.

Features of Wireless Camera:[11]

• Automatic Motion detection features.
• Minimum 100 meters transmission distance without block.
• Imaging Sensor 1/3 Inch-CMOS.
• CMOS Total Pixels: 628*582(PAL)/510*492(NTSC).
• Minimum Illumination: 1.5 lux
• View angle: 62 Degree
• Camera Head weight: 15 gm.

ANDROID APPLICATION:

Millions of users are using android applications today. MIT app inventor is one of the forum which has provided millions of creators and inventors the opportunity to design their own android application. The following are the procedures and steps to create the android application.

Procedure and Steps for Android Application

• Select the ai2.appinventor.mit.edu website and create an account on it.
• There are two sections i) Designer ii) Blocks.
• First step is to select the Horizontal arrangement from the Layout option.
• Select the block of List Picker and Upload Image in that from the properties Section. The List Picker will help to pick the required Bluetooth connection from the List.
• Now to design the Remote Control, Select the Button option.
• Select the Tabular Arrangement and then one by one place five buttons which will act as forward, reverse, right, left and stop buttons.
• A slider is placed at the bottom to control the speed of the robot
• Select Bluetooth Client from the block Connectivity.
• Select the Clock option also.
• Create two more buttons for rotating the camera left or right.
• Next step is the blocks designing.
• Block designing consists of connecting programmed blocks with each other. Some figures below will describe the block programming.
• Select the block of list picker before picking and adjust the block of bluetooth client. Next select the list picker after picking option.
• Select the block of clock and adjust the bluetooth client block with it. Select the connected option from the different options given like control, Math etc.[5,10]

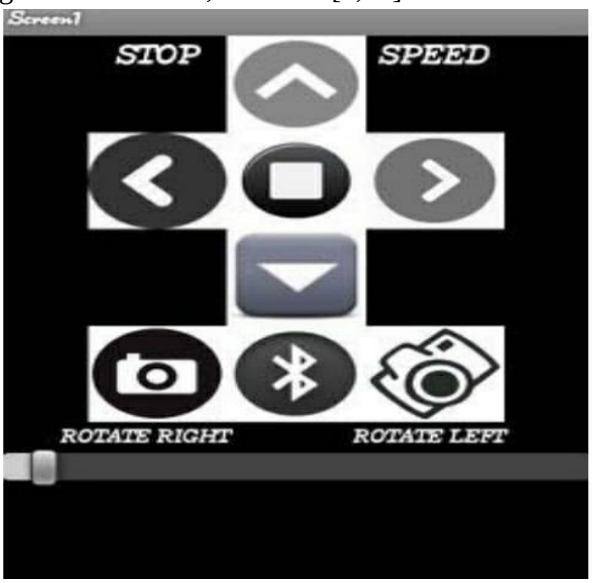

Fig. Android Application in Smartphone

Fig. Bluetooth List Selection

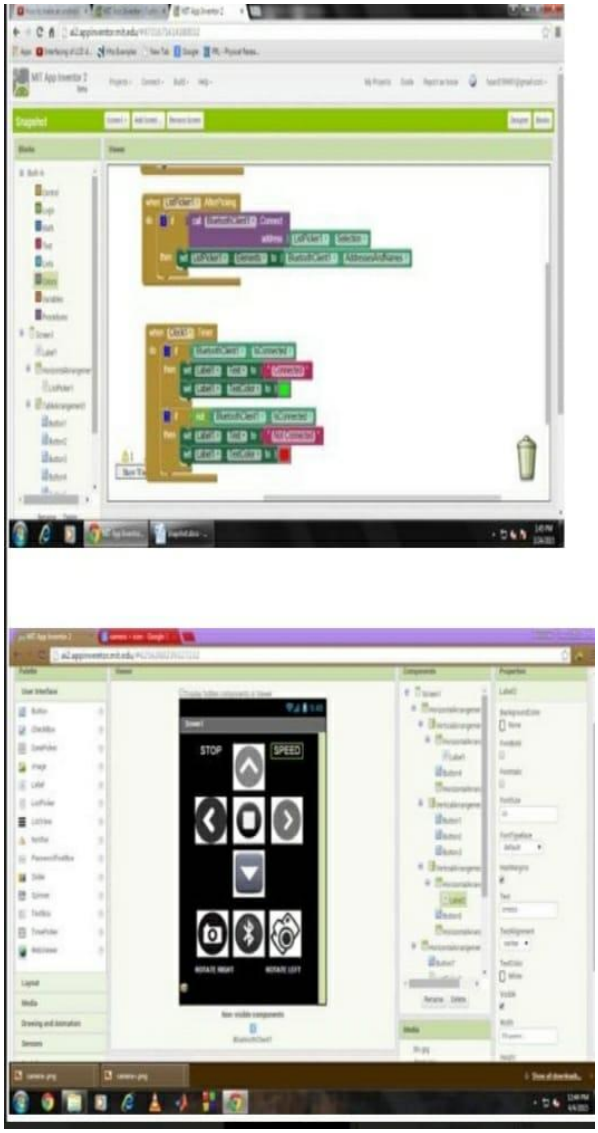

Fig. Block Programming [10] and Android Application Design [10]

APPLICATIONS [11]

- Military operations.
- Surveillance along border.
- Search and Rescue operation.
- Maneuvering in hazardous environment

CONCLUSION

In this paper, the model of robot can be described to build a robotic vehicle which can be operated in two modes either war field mode or borer security mode and the android application is used to control the robot through wireless application using the platform of MIT app inventor. The robot can be made more enhanced by adding features like gas sensors and bomb defuse kit.

REFERENCES

[1] [2] Jenifer, T. Maria, et al. "Mobile Robot Temperature Monitoring System Controlled by Android Application via Bluetooth." International Journal on Advanced Computer Theory and Engineering (IJACTE) 2.3 (2013).

[3] Pahuja, Ritika, and Narender Kumar. "Android Mobile Phone Controlled Bluetooth Robot Using 8051 Microcontroller." Electronics & Communication Engineering, Department, BRCM College of Engineering & Technology, Bahal, India, International Journal of Scientific Engineering and Research (IJSER) www.ijser.in ISSN (Online) (2014): 2347-3878.

[4] Mehta, Mr Lokesh, and Mr Pawan Sharma. "SPY Night Vision Robot with Moving Wireless Video Camera & Ultrasonic Sensor."

[5] Yeole, Aniket R., et al. "Smart Phone Controlled Robot Using ATMEGA328 Microcontroller."

[6] Borker, Kunal,Rohan Gaikwad, and Ajaysingh Rajput. "Wireless Controlled Surveillance Robot." International Journal 2.2 (2014).

[7] MacMillan, Neil, et al. "Range-based navigation system for a mobile robot."Computer and Robot Vision (CRV), 2011 Canadian Conference on. IEEE, 2011.
[8] http://en.wikipedia.org/wiki/2014_Sydney_hostage_crisis-The Sydney Siege
[9] "HC-05 Bluetooth Module, Arduino-Bluetooth Interfacing"-www.engineersgarage.com
[10] "MIT AppInventor"-www.appinventor.mit.edu. [11] Night Vision Wireless Camera'-www.slideshare.net/abhilashkotawar/war-field-spying-robot-withnight-v.

Design of an Intelligent Wheelchair System Using Arduino

D.Vennila[1], R.Sivakumar[2], M.Vigneshwaran[3], M.A.Yuvankishore [4]
[1] Assistant professor, Department of ECE, Kings College of Engineering, Punalkulam, Pudukkottai
[2,3,4] UG Scholar, Department of ECE, Kings College of Engineering, Punalkulam, Pudukkottai

Abstract - Many physically challenged people usually depend on others in their daily life especially in moving from one place to another place. For the wheelchair users, they need a continuous support. By having an intelligent wheelchair control system they will become more independent. The aim of this project is to develop an intelligent wheelchair system with voice, touch and keypad controlled using an embedded system. An android application is developed and installed on the android smartphone. The system is divided into three main modes: voice mode, touch mode and keypad mode. For the voice mode, elderlies or physically disabled people (users) can provide the voice input, for example, "forward", "reverse", "turn to the left", "turn to the right" and "stop". The wheelchair will move according to the command given. For the touch mode, the user can select the specified direction displayed within the four quadrants on the screen of the android smartphone to control the wheelchair. And also it can be controlled by using Arrow keys in the keyboard mode i.e. (Up, Down, Left, Right, Stop). Based on Arrow keys pressed on key board the corresponding direction of wheelchair is going to be change. A voice controlled wheelchair can provide easy access for physical disabled person who cannot control their movements especially through hands. An Arduino mega is used to execute all commands. IR Sensors to detect the hurdles in between wheelchair and the way of direction and Voltage sensor, Temperature sensor used in this project. Temperature sensor senses the motor heat and voltage sensor used to measure the battery voltage show in LCD display.

Keywords—Arduino Mega, Bluetooth Module, android app, smart wheelchair, Temperature sensor, Voltage sensor, IR sensor, keypad

INTRODUCTION

Due to the increased percentage of elderlies and physically disabled people, wheelchairs are the best assistive devices to help them enhance their personal mobility. A smart wheelchair is developed to help an elderly or physically disabled person (user) to move from one place to another independently. An android application is developed and installed in the android smartphone. It consists of three controlled modes, the first mode is the voice mode and the second mode is the touch mode third mode is keypad mode[1]. In the first mode, the user can give the voice input using an android smartphone. The android smartphone will convert the voice commands into a string of data and this string of data will be sent to the Bluetooth module and lastly delivered to Arduino mega. After that, Arduino will decodes and process it. The motor driver will direct the wheelchair according to the command given. When the user says "forward", the wheelchair will move forward, the word "reverse" causes the wheelchair to move backward, the word "turn to the left" causes the wheelchair to turn left, and the word "turn to the right" causes the wheelchair to turn right. For the second mode, the user can determine the wheelchair's movement by selecting the desired direction on the android smartphone phone screen. The command given by the user will be forwarded to the Arduino Mega via Bluetooth. The Bluetooth will convert the commands given by the user in a binary format and send them to the Arduino mega. Arduino mega will read and execute the command and lastly send the digital values to the motor driver device. The

motor driver will direct the wheelchair according to the command given. When the user selects the "Go" arrow, the wheelchair will move in a forward direction, "Back" arrow prompts the wheelchair to move backward, and "Left" arrow causes the wheelchair to turn left, and "Right" arrow makes the wheelchair turn right [2]. An elderly or physically challenged person can direct the direction and movement of the wheelchair with the help of the android smartphone in four different directions, left, right, forward, reverse and stop. The wheelchair will move according to the command given by the user. For the third mode, the user can determine the wheelchair's movement by selecting the desired direction on the Keypad. The command given by the user will be forwarded to the Arduino Mega. Arduino mega will read and execute the command and lastly send the digital values to the motor driver device. The motor driver will direct the wheelchair according to the command given. When the user selects the "Go" arrow, the wheelchair will move in a forward direction, "Back" arrow prompts the wheelchair to move backward, and "Left" arrow causes the wheelchair to turn left, and "Right" arrow makes the wheelchair turn right. An elderly or physically challenged person can direct the direction and movement of the wheelchair with the help of the android Button in four different directions, left, right, forward, reverse and stop. The wheelchair will move according to the command given by the user. In [3] presented an idea of an eye controlled system which enables the movement of wheelchair depends on the movements of eyeballs. A camera is mounted on the wheelchair; the wheelchair can move in a certain direction when the user looks at that direction by making eye movements. Based on the eye-detected location, the direction of the possible motion is found, the command is transmitted to the motor control device via Arduino. Pajkanovic and Dokic proposed a microcontroller system that enables an electric wheelchair to be controlled by the head motion. The system comprises electronic and mechanical components [4]. The accelerometer is used to collect the head motion data. The output of the digital system is connected to a mechanical actuator and it is used to position the wheelchair's joystick based on the user's command. The sensor data is processed by a novel algorithm; it is implemented within the microcontroller. The user's head motion is translated into the wheelchair's joystick position. Nishimori et al. implemented a voice controlled wheelchair [5] which uses the voice command as the interface. A grammar-based recognition parser named "Julian" is used in this system. This is open-source software which is developed by Kyoto University and Nara Institute of Science and Technology. The voice commands consist of nine reaction commands and five verification commands. The reaction commands consist of five basic reaction commands and four short moving reaction commands. This system is based on the commercial electronic wheelchair Nissin Medical Industries co. NEO-PI. In this system, it consists of a headset microphone and a laptop. The user can select either to control by voice or button. The control signal is sent to PIC from the laptop, and the PIC generates the motor control signal to drive the wheelchair. Meanwhile, in [6] introduce the voice recognition module with smart wheelchair and have same control movement with this project but in this paper recognize the commands through microphone. While in [7] smart wheelchair with voice recognition upgrades its capability with navigation maps and person present location with GPRS and GSM system.

In this paper we will discuss, a intelligent wheelchair is developed to help an elderly or physically disabled person (user) to move from one place to another independently. An android application is developed and installed in the android smartphone. It consists of three controlled modes, the first mode is the voice mode and the second mode is the touch mode third mode is keypad. An elderly or physically challenged person can direct the direction and movement of the wheelchair with the help of the android smartphone in four different directions, left, right, forward, reverse and stop. The wheelchair will move according to the command given by the user.

METHODOLOGY

An android application is developed and installed in the android smartphone. It consists of three controlled modes, the first mode is the voice mode and the second mode is the touch mode third mode is keypad mode.

In the first mode, the user can give the voice input using an android smartphone. The android smartphone will convert the voice commands into a string of data and this string of data will be sent to the Bluetooth module and lastly delivered to Arduino mega. After that, Arduino will decodes and process it. The motor driver will direct the wheelchair according to the command given.

The second mode, the user can determine the wheelchair's movement by selecting the desired direction on the android smartphone phone screen. The command given by the user will be forwarded to the Arduino Mega via Bluetooth. The Bluetooth will convert the commands given by the user in a binary format and send them to the Arduino mega. Arduino mega will read and execute the command and lastly send the digital values to the motor driver device. The motor driver will direct the wheelchair according to the command given.

The third mode, the user can determine the wheelchair's movement by selecting the desired direction on the Keypad. The command given by the user will be forwarded to the Arduino Mega. Arduino mega will read and execute the command and lastly send the digital values to the motor driver device. The motor driver will direct the wheelchair according to the command given.

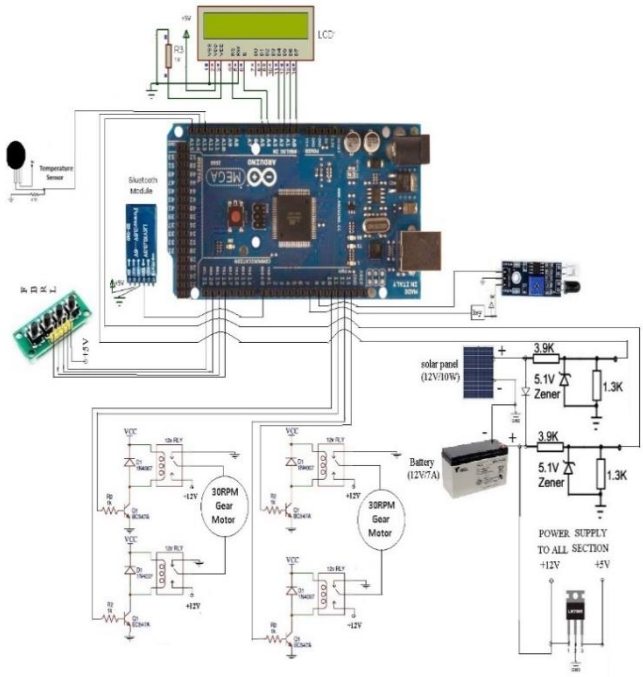

Fig. 1. Wiring diagram of Wheelchair body circuit.

In this paper, few methods are applied like voice control, Smartphone control through Bluetooth, keypad control through Arduino mega Speed control and obstacle avoiding system. Object sensor (IR sensor) sensed object condition detect any object automatically wheel chair braking unit activated. Temperature sensor sensed motor heat. Motor heat reached set value then alarm

unit automatically on. Voltage sensor are used to measure battery charger and also calculate the how many kilometers to go the wheel chair given charge. LCD display show the motor heat and battery charge capacity.

III. BLOCK DIAGRAM

The Block diagram represents the main components and basic functioning of the project. The Wheelchair unit consists of Arduino Mega, Bluetooth module, IR sensor, Temperature sensor, Voltage sensor, Solar panel, Power supply, Motor driver, Relay and motors. Fig .2 describes the block diagram of Wheelchair Control Unit. Fig .3 is the block diagram of the Bluetooth Module.

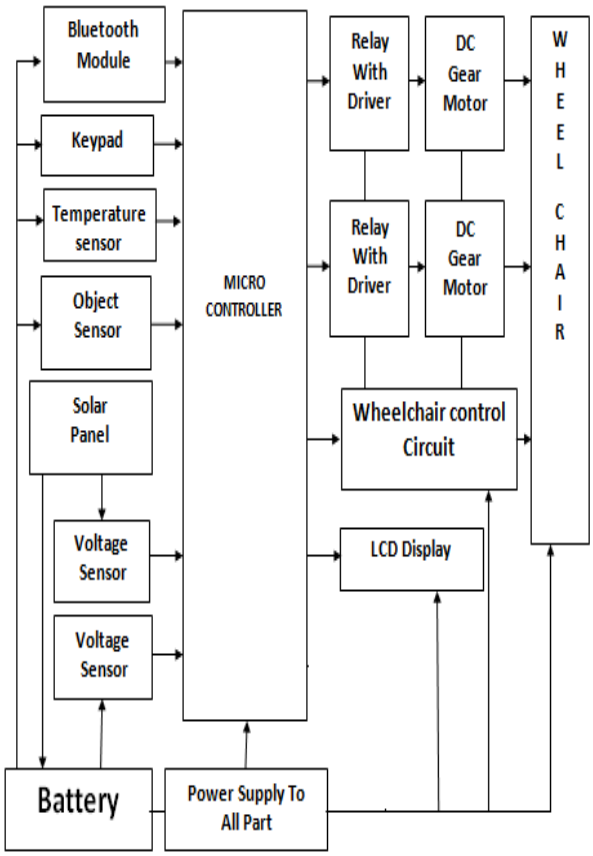

Fig. 2. Block diagram of Wheelchair Control Unit.

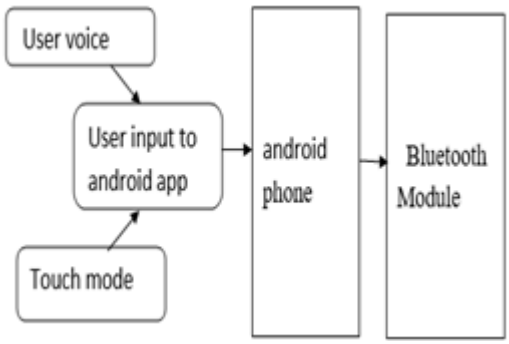

Fig 3. Block diagram of the Bluetooth Module

DESIGN & FABRICATION

The system architecture and design of the following project are briefly described in this section. An intelligent wheelchair is a combination of sensors, actuators, a protocol for networking and mechanical structure.

The mechanical design of the project is designed by SolidWorks'16. A prototype of the wheelchair is designed where aluminum and wood are used in the design. In this paper, an aluminum angle bar is considered with the volume of 1*1*2 mm^3. The body is built according to the design. The aluminum angle bar has a volume of 1*1*2 mm^3. It can carry up to 450N. After that, it will start to break itself. Fig 4 shows the Orthographic view of the wheelchair and Fig 5 indicates the load testing result of the proposed wheelchair.

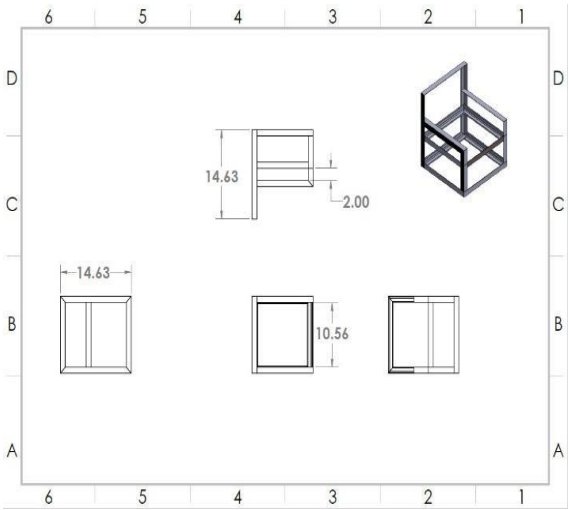

Fig. 4. Orthographic view

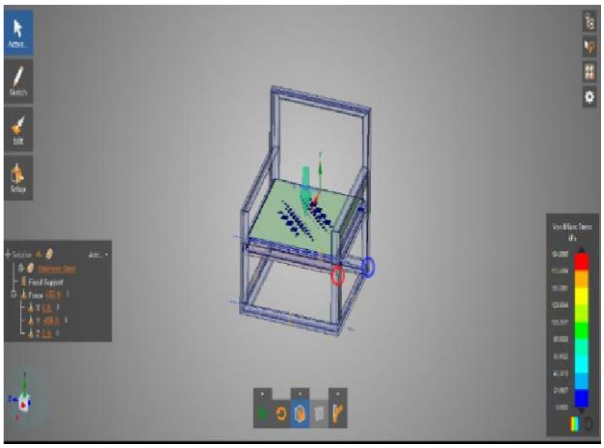

Fig. 5. Load testing of the wheelchair

In this wheelchair, several sensors are used such as IR sensor, temperature sensor, voltage sensor. The wheelchair is controlled by Arduino Mega. In this project, we selected the components and design of the body to meet the afforested criteria

Fig. 6. Practical implementation of a prototype for the proposed wheelchair.

PERFORMANCE ANALYSIS

For the voice mode, touch mode and keypad mode, the wheelchair will move according to the command given. There are four possible directions of movements: forward, backward, left, right.

Voice mode:

This system will be designed to operate the wheelchair based on the voice of the user and control the movement according to the command given by the operating person.

Fig. 7.Voice mode

Touch mode:

After implementation of the Intelligent wheelchair and its functionality was tested, it is found that the movement of the wheelchair using the touch mode revealed an excellent functionality in all directions. The android application is perfectly designed in order for the user to control the wheelchair.

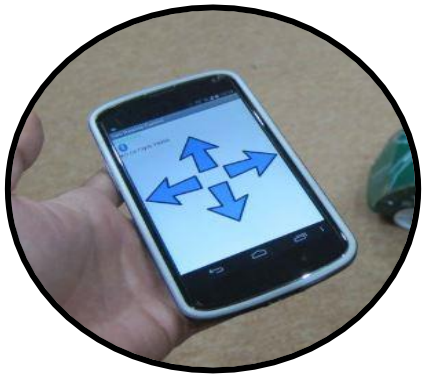

Fig. 8. Touch mode

Keypad mode:

This system will be designed to operate the wheelchair based on the keypad the user and control the movement according to the command given by the operating person.

Fig. 9.Keypad mode

The wheelchair is powered by a smartphone in this research. The Bluetooth module is used to create communication between smartphones and wheelchairs. An apk android file is developed for this wheelchair to work as a controller. The steering control of the wheelchair is set to the Android software. By touching the direction, the signal will be sent to the wheelchair via the Bluetooth module. The Bluetooth module receives the signal and commands the engine driver to switch to the provided location.

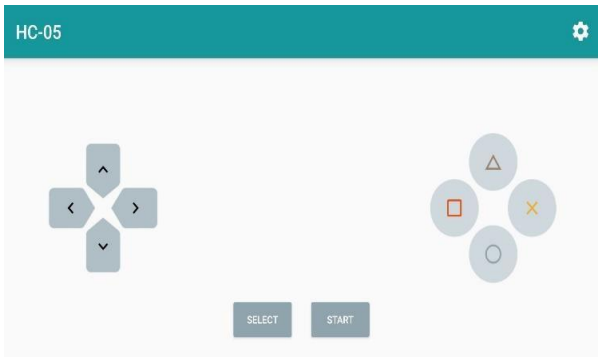

Fig. 9. Smart Phone control interface for the proposed model.

Obstacle avoiding is another feature of this project. It is used to avoid accidents and keep the user safe. This feature will keep the wheelchair away from the obstacles and stops it immediately. For this obstacle avoiding system, IR sensor is used. Whenever it gets any obstacles in its surroundings it will not execute its operation. It will stop from a limited distance. A temperature sensor is set in the project. It is used to measure the motor heat in the wheelchair. voltage sensor set in the project and it's used to measure the battery charge show the lcd display. If the wheelchair falls into an accident and falls into the ground it will light up and sound an alarm and let other people know about the accident. As the proposed wheelchair is divided into three major parts like voice and main wheelchair unit, both parts require power from a battery. A rechargeable battery is used for better performance.

CONCLUSION

This wheelchair system is a combination of mechanical, electrical and communications system. The main objectives were to design an android application that can direct the movement of a wheelchair, to develop the voice mode ,touch mode and keypad mode to help the elderlies and physically disabled people to move their wheelchairs independently and to provide the elderlies and physically disabled people with the ability to control the movement of the wheelchairs by using android smartphones. The system designed has undergone a few tests and successfully completed the basic performance. The objectives were achieved as the software and hardware implementation work well as expected. This system will helps the elderlies and limb disabled people to control wheelchairs with either a touch mode or voice mode or keypad mode, therefore this success

is to serve many people with disabilities. From the conducted research, it can be seen clearly that a mobile controlled wheelchair will have a bright future. It should be continued and developed in the future as it has a huge potential to improve its performance, reliability and safety.

REFERENCES

[1] Rana Mohammad Yousef, Omar Adwan, and Murad Abu-Leil. "An Enhanced Mobile Phone Dialler Application for Blind and Visually Impaired People", International Journal of Engineering & Technology, Volume 2, Issue 4, (2013)pp. https://doi.org/10.14419/ijet.v2i4.1101

[2] Khalil Azha Mohd Annuar, Md Zin, Muhammad Haikal, Mohamad Haniff Harun, Mohd Ab Halim, Mohd Firdaus, Arman Hadi Azahar, "Design and Development of Search and Rescue Robot" International Journal of Mechanical & Mechatronics Engineering, Volume 16, No. 02 (2016) pp. 36-41.

[3] Cerejo, R., Correia, V. & Pereira, N., "Eye Controlled Wheelchair Based On Arduino Circuit", 3(6), (2015) pp.94–98.

[4] Nishimori, M., Saitoh, T. & Konishi, R., "Voice Controlled Intelligent Wheelchair" SICE Annual Conference 2007, (2007) pp.336– 340.

[5] Pajkanovic, A. & Dokic, B., "Wheelchair Control by Head Motion", Serbian Journal of Electrical Engineering, 10(1), (2013) pp.135–151. https://doi.org/10.2298/SJEE1301135P

[6] Srishti, Prateeksha Jain, Shalu, Swati Singh., " Design and Development of Smart Wheelchair using Voice Recognition and Head Gesture Control System", International Journal of Advanced Research in Electrical, Electronics and Instrumentation Engineering, Vol. 4, Issue 5, (2015) pp.4790-4798.

[7] C. Swaroop, S. Sabarinath, Mohammed Akramali, "Embedded Based Smart Wheel Chair with Voice Recognition", Journal of Advanced Engineering Research, Volume 2, Issue 2, 2015, pp.65-68.

Design of an Internet of Things (IoT) Based Smart Irrigation System and Protection of Plant

D.Baskaran[1], S.K.Bragadheesh[2], B.Ranganathan[3], J.Sumathi [4]
[1] Assistant Professor and Department of Electronics and Communication Engineering, Electronics and Communication Engineering, Nandha College of Technology
[2,3,4] UG Scholar, Electronics and Communication Engineering, Nandha College of Technology

Abstract - This paper propose to the smart irrigation system which can be used to controlling the watering or irrigation of flowering plants.it controlling the irrigation of plant the automatically where needed the human intervention can be reduced. To continuously monitor the soil dry and wet condition. there are three type parameter can be monitor the moister and its PH level protection of agriculture in animals attack to protect using shock .the main objective of this project to design smart irrigation and shock protection of chili plant using FUZZY logic .In this project, implementation of internet of things (IOT) also included where WI- FI node is used mean of connection medium. FUZZY Logic was implemented control in this system to administrate the flow rate of water. The smart watering system consist of an irrigation controller a solenoid valve. The mobile phone remotely controls the automatic irrigation.it was save the time and labor cost. It suitable for small scale irrigation control in parks, courtyards, traditional irrigation controllers that operate on a preset programmed schedule and timers, smart irrigation controllers monitor weather, soil conditions, evaporation and plant water use to automatically adjust the watering schedule to actual conditions of the site.

Keywords—Arduino Mega, Bluetooth Module, android app, smart wheelchair, Temperature sensor, Voltage sensor, IR sensor, keypad

INTRODUCTION

Automation of form operations will transform agricultural domain from being manual to intelligence. It is used to higher production with lesser human supervision. Irrigation is one of the primary components in agriculture. Due to outdated techniques in developed and undeveloped countries, there is a large amount of water wasted in this process. In this project, we have devised a fuzzy logic base smart irrigation controller prototype to put a check on this water wastage by providing an ideal irrigating environment for farming. This project reduces the water usage in the agricultural field and increase the production yield. This smart irrigation model is innovative and unique in the sense that it can the irrigation scheduling for all types of crops, across all climatic conditions for all soil types upon feeding the proper soil-crop growth stage combinations in the inference engine. By using smart irrigation controller, maximum area can be irrigated in less time. Automatic irrigation system will allow farmers to continuously monitor the moisture level in field. It controlling the supply remotely over the internet. When moisture of the soil goes below a certain level, valve is opened automatically. Thus achieving optimal irrigation using Internet of Things. This automatic irrigation system is an IOT device which is capable of automating the irrigation process by analyzing the moisture of soil and the climate condition. Automatic irrigation controller used to save water and also reduce the human intervention in the agricultural field. It continuously monitoring the status of soil through sensors and provide signal taking necessary action. It

is to observe the parameters for better yield. The key feature that an irrigation controller should be able to provide are high efficiency, low power consumption with minimal inter-segment producing multi-functioning agricultural water-saving platform.

Literature review

AUTHOR NAME & YEAR	TITLE	METHODOLOGY	ADVANTAGES	DISADVANTAGES
ET Maddiane , CG Das Morais & 2019	A battery less photo volcanic water pump system with low decoupling capacitance	By using voltaic cell and decoupling capacitance	No input voltage source is required	DC link stiffness reduce and large Voltage oscillation occurs
Jose.V.Aguilar,Pedro Langarita, Jose Rodellar,Klaudir Harvath & 2016	Predictive control of irrigation canals robust design and real time implementation	By using predictive control -PID control model identification water discharge control	Simple to design	Prediction should be much more efficient
Rahul Karmakar Bidjut Bimar sarkar & 2021	A prototype modelling of smart irrigation system using Event B	Using Event B modelling smart irrigation IoT	A mobile app can also be designed for farmer for ready to use	Should require more features
A.Senpinar & 2019	Internet Arduino controlled PV Automatic irrigation system for clean environment	By using soil sensor requirement of water is a accurately dropped for crops irrigation	Wastage of water requirement is reduced	Should required more features

Methodology:

The automatic irrigation system is an IOT based device which is capable of automating the irrigation process by analysis the moisture of soil and the climate condition. The automatic irrigation controller consists of following steps:

1) Acquiring weather and field data via sensors

2) To uplink the entire setup on the cloud via the IOT The methodology of automatic irrigation controller was discussed in this section. Section A, discussed on hardware implementation of irrigation system. Next section B was discussed on implementation of fuzzy logic controller and simulation.

A. Hardware development:

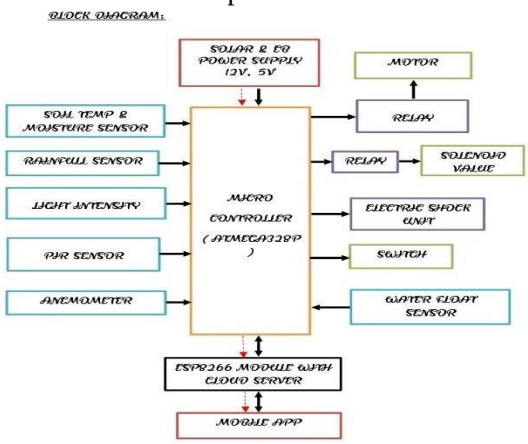

A.Fig.1. Block Diagram of the project

Figure 1 shows the block diagram of automatic irrigation controller. It is implemented by Arduino as a controller with several input and output. The inputs of this project are soil pH sensor, Moisture sensor, Temperature sensor, Rainfall sensor, Light intensity sensor, PIR sensor and Anemometer. Hence, these input sensors are connected to the controller. Arduino and Node Micro Controller Unit (Node MCU) is the controller used in this project. The Arduino will follow the decision instructed by fuzzy logic. It determines the output value.

Soil moisture sensor

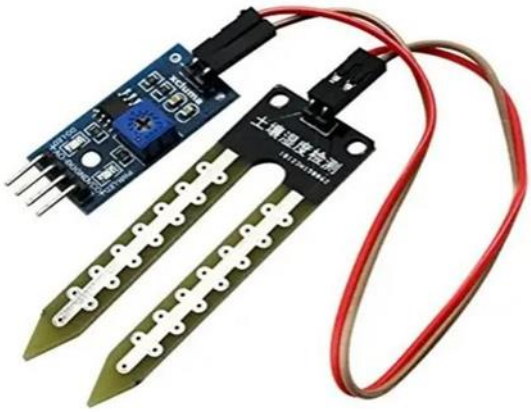

The soil moisture sensor (SMS) is a sensor connected to an irrigation system controller that measures soil moisture content in the active root zone before each scheduled

irrigation event and bypasses the cycle if soil moisture is above a user- defined set point.

Temperature sensor

A temperature sensor is an electronic device that measures the temperature of its environment and converts the input data into electronic data to record, monitor, or signal temperature changes. There are many different types of temperature sensors.

Rain fall sensor

A rain sensor or rain switch is a switching device activated by rainfall. There are two main applications for rain sensors. The first is a water conservation device connected to an automatic irrigation system that causes the system to shut down in the event of rainfall.

PIR sensor

A passive infrared sensor (PIR sensor) is an electronic sensor that measures infrared (IR) light radiating from objects in its field of view. They are most often used in PIR-based motion detectors. PIR sensors are commonly called simply "PIR", or sometimes "PID", for "passive infrared detector"

Anemometer

Anemometer, device for measuring the speed of airflow in the atmosphere, in wind tunnels, and in other gas-flow applications. Most widely used for wind-speed measurements is the revolving-cup electric anemometer, in which the revolving cups drive an electric generator.

Water flow sensor

Water Flow Sensor. Water flow sensors are installed at the water source or pipes to measure the rate of flow of water and calculate the amount of water flowed through the pipe. Rate of flow of water is measured as liters per hour or cubic meters

Light intensity sensor

Light Sensors are photoelectric devices that convert light energy (photons) whether visible or infra-red light into an electrical (electrons) signal

Solenoid valve

A solenoid valve is an electromechanically-operated valve. Solenoid valves differ in the characteristics of the electric current they use, the strength of the magnetic field they generate, the mechanism they use to regulate the fluid, and the type and characteristics of fluid they control.

Microcontroller

A microcontroller (MCU for microcontroller unit) is a small computer on a single metal-oxide- semiconductor (MOS) integrated circuit (IC) chip. A microcontroller contains one or more CPUs (processor cores) along with memory and programmable input/output peripherals.

B. Fuzzy Logic Controller.

To design the Fuzzy logic. Soil moisture and soil pH value are the two input values used in fuzzy logic. The inputs MATLAB software was used conditions will be mapped to three output variables which are the flow rate of alkaline, neutral and acid solutions. Table 1 shows the fuzzy rules designed for the acid solution. The acid flow is represented by the output condition. The two input condition trigger the water pump and valve. If the pH soil was detected as Acid and Neutral with range of 1 until 8pH, the output was “OFF”. That means no output solution from Acid and Neutral. When the range of pH soil is between 8.1 to 10 and the moisture is between 0% to 39%, the condition of output for Alkali solution will be ‘LOW’. If the pH value is between 8.1 to 10pH while moisture is 40% to 79%, the output of the Alkali solution will be “MEDIUM”. Lastly, when the pH value is 8.1 to 10pH value and moisture value is between 80% until 100%, the alkali solution will be “HIGH”. Table II shows the fuzzy rules of Neutral solution. The flow rate of Acid and Alkali solution was in “LOW” condition where the pH soil was in the range of 1 until 4 and 8.1 until 12 with 0% to 100% of soil moisture. If the input of pH value is 5 to 6pH value and moisture value is between 0% to 39%, the output solution of Neutral will be “HIGH”. Also, with same value of pH soil where soil moisture was 40% to 79%, the output will be ‘MEDIUM and if the soil moisture was 80% to 100%, the condition was “LOW”. Table III shows the fuzzy rules of Alkali solution. When the pH soil was in the range of 1 until 4.9 with 0% to 39% of soil moisture, it is in “LOW” condition of Acid solution. If the pH soil was remained the same,

the moisture was in 40% to 79%, the output was "MEDIUM" and 80% to 100% of soil moisture, the output was "HIGH". The output condition of Alkali and Neutral solution was "OFF" when pH soil was in the range of 4.1 until 12, with 0% to 100% of soil moisture. Next, membership function of the input and output was implemented using MATLAB software. Using fuzzy logic system, There are 2 memberships function for input and 3 membership function for output.

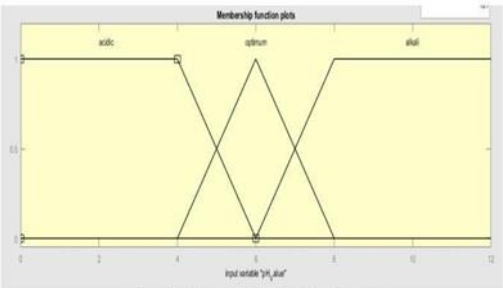

Fig. 2. The membership for pH value.

Figure 2 shows the membership functions of input which is pH soil. The input range of pH value are between 0 to 12pH. The acidic soil begins with value of 1pH until 6pH. For medium input, the value begins with 4pH until 8pH where the range are mapped with acidic at the range of 4pH until 6pH and the alkali at the range of 6pH until 8pH. Lastly, the alkali soil begins with 8pH to 12pH.

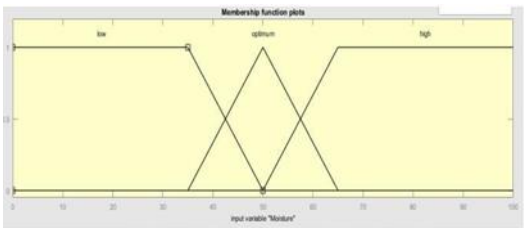

Fig. 3. The membership for moisture value.

Figure 3 shows the membership function of soil moisture. The range of input was started by 0% until 100%. There are 3 regions of the input which are low, optimum and high. For low region, the value begins with 0 until 35% of input. For optimum, the value begins with 35% until 65% where the range are mapped within 35% until 50% of low region and 50% and 65% of high region. Lastly, the range of high region between 65% until 100% of input.

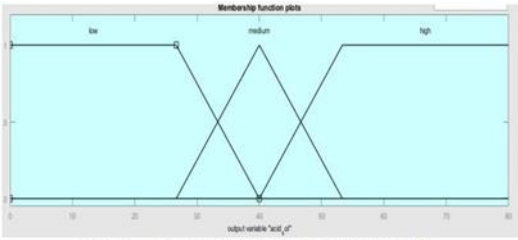

Fig. 4. The membership for Acid solution(tank).

Figure 4 shows the membership function of Acid solution. The maximum range of the membership is 80ml. There are 3 regions of the membership functions which low, medium and high. For low region, the range of output solution from 0ml to 40ml. For medium region, the value begins with 25ml to 55ml where the region was mapped to low and high region with 25ml until 40ml and 40ml until 55ml, respectively. Lastly, the high region between 55ml until 80ml.

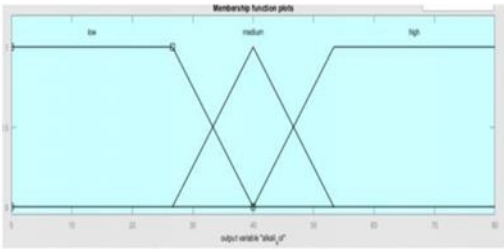

Fig. 6. The membership for Alkali solution (tank).

Figure 6 shows membership function of Alkali solution. The membership function had maximum range of 80ml. There are 3 region of output which is low, medium and high. For low region, the value of output solution begins with 0ml to 25ml. For medium region, the membership starts with 25ml to 55ml of output where the region was mapped to low and high region with range of 25ml until 40ml and 40ml until 55ml, respectively. Lastly, the

membership for high region starts with 55ml to 80ml.

Result and Discussion:

A. Fuzzy Logic Validation Test.The performance of the output wad verified using simulation in MATLAB software to ensure the output flow rate was accurate.

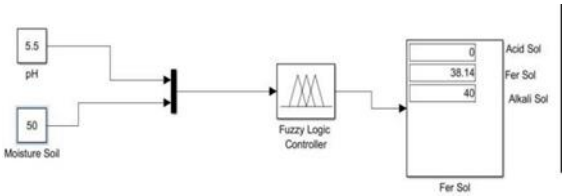

Fig. 7. The simulation diagram of fuzzy logic controller.

B. Apps Display:

Blynk is a platform that allow to build interfaces for the control and monitor of hardware projects from iOS and Android device quickly. It is used to monitor the condition of input which is pH soil, soil moisture, temperature, rainfall detection and light intensity where it is display on mobile phone. The mobile phone was connected via Wi-Fi using node MCU to get the latest update on the condition of the soil and plant. The user also able to turn ON and OFF water pump using the button in mobile apps.

Conclusion :

The results of Real time implementation of IoT based automatic irrigation controller showed that water reduced in the agricultural field and production yield is improved. So it is inferred that the objectives of the model i.e. reduction of water usage and wastage and improvement in product yield are successfully achieved. We also aim to protection of plants with this system. The project was successfully implemented the Internet of Things (IoT) by using Wi-Fi and mobile phone as a medium to monitor the performance of plants.

Reference:

1) G. Kaur, "Budget 2020: Agriculture Key in Revival of Economy", grainmart.in, 2020.

2) F. Poyen, "Automated Watering System for Agricultural Fields", International Journal of Advances in Electronics Engineering, vol. 2, no. 3, pp. 104-107, 2012.

3) “Irrigation water management in paddy | agropedia", Agropedia.iitk.ac.in, 2018. [Online]. Available:http://agropedia.iitk.ac.in/content/irrigation -water-management-paddy.

4) R. Allen, L. Pereira, D. Raes and M. Smith, "Crop evapotranspiration - Guidelines for computing crop water requirements - FAO Irrigation and drainage paper 56", FAO -Food and Agriculture Organization of the United Nations Rome, 1998, pp. 2-5, 1998.

5) K. Nemali and M. van Iersel, "An automated system for controlling drought stress and irrigation in potted plants", Scientia Horticulturae, vol. 110, no. 3, pp. 292-297, 2006. DOI:10.1016/j.scienta. 2006.07.009.

6) S. O'Shaughnessy and S. Evett, "Canopy temperature based system effectively schedules and controls center pivot irrigation of cotton", Agricultural Water Management, vol. 97, no. 9, pp. 1310-1316, 2010. DOI: 10.1016/j.agwat.2010.03.012.

7) Zhang Feng, "Research on water-saving irrigation automatic control system based on internet of things", 2011 International Conference on Electric Information and Control Engineering, 2011. DOI: 10.1109/iceice.2011.5778297.

8) "IEEE Standard for Information Technology - Telecommunications and information exchange between systems - Local and Metropolitan networks - Specific requirements - Part 11: Wireless LAN

Medium Access Control (MAC) and Physical Layer (PHY) specifications: Higher Speed Physical Layer (PHY) Extension in the 2.4 GHz band", 2000. DOI: 10.1109/ieeestd.2000.90914.

9) "IEEE Standard for Information technology-- Local and metropolitan area networks--Specific requirements-- Part 15.4: Wireless Medium Access Control (MAC) and Physical Layer (PHY) Specifications for Low Rate Wireless Personal Area Networks (WPANs)", 2006. DOI: 10.1109/ieeestd.2006.232110.

10) J. Gutierrez, J. Villa-Medina, A. Nieto-Garibay and M. Porta-Gandara, "Automated Irrigation System Using a Wireless Sensor Network and GPRS Module", IEEE Transactions on Instrumentation and Measurement, vol. 63, no. 1, pp. 166-176, 2014. DOI: 10.1109/tim.2013.2276487.

11) J. Parmenter, A. Jensen and S. Chiu, "Smart irrigation controller", IEEE International Conference on Electro/Information Technology, 2014. DOI: 10.1109/eit.2014.6871796.

12) N. Wang, N. Zhang and M. Wang, "Wireless sensors in agriculture and food industry—Recent development and future perspective", Computers and Electronics in Agriculture, vol. 50, no. 1, pp. 1-14, 2006. DOI: 10.1016/j.compag.2005.09.003.

13) D. Chaudhary, S. Nayse and L. Waghmare, "Application of Wireless Sensor Networks for Greenhouse Parameter Control in Precision Agriculture", International Journal of Wireless & Mobile Networks, vol. 3, no. 1, pp. 140-149, 2011. DOI: 10.5121/ijwmn.2011.3113.

14) P. Marino, F. Fontan, M. Dominguez and S. Otero, "An Experimental Ad-Hoc WSN for the Instrumentation of Biological Models", IEEE Transactions on Instrumentation and Measurement, vol. 59, no. 11, pp. 2936-2948, 2010. DOI: 10.1109/tim.2010.2045970.

15) Yunseop Kim, R. Evans and W. Iversen, "Remote Sensing and Control of an Irrigation System Using a Distributed Wireless Sensor Network", IEEE Transactions on Instrumentation and Measurement, vol. 57,no. 7, pp. 1379-1387, 2008. DOI: 10.1109/tim.2008.917198.

16) Y. Kim, J. Jabro and R. Evans, "Wireless lysimeters for real-time online soil water monitoring", Irrigation Science, vol. 29, no. 5, pp. 423-430, 2010. DOI: 10.1007/s00271-010-0249-x.

17) A. Felix, H. Orovwode, A. Awelewa, S. Wara and O. Tobiloba, "DESIGN AND IMPLEMENTATION OF AN AUTOMATIC IRRIGATION SYSTEM BASED ON MONITORING SOIL MOISTURE", Journal of Electrical Engineering, vol. 16, pp. 2016-215, 2016.

18) T. Marinescu et al., "Advanced control strategies for irrigation systems", 2017 9th IEEE International Conf erence on Intelligent Data Acquisition and Advanced Computing Systems: Technology and Applications(IDAACS),2017. DOI: 10.1109/idaacs.2017.8095206.

19) E. Avsar, K. Bulus, M. Saridas and B. Kapur, "Development of a cloud-based automatic irrigation system: A case study on strawberry cultivation", 2018 7th International Conference on Modern Circuits and Systems Technologies (MOCAST), 2018. DOI: 10.1109/mocast.2018.8376641.

20) İ. TAŞ and H. KIRNAK, "Empirical Models Used in the Estimation of Crop Evapotranspiration in Semi Arid Region of Turkey", ADÜ Ziraat Fakültesi Dergisi, vol. 8, no. 1, pp. 57-66, 2011.

Adaptive Medical Image Processing Using Deep Neural Network

M.Divyabharathi[1], M.Balamurugan[2], K.Perac[3]
[1,2] U.G Students, B.E-Department of Electronics and Communication Engineering, Sardar Raja College of Engineering, Alangulam, Tirunelveli, Tamil Nadu, India
[3] Assistant Professor, Department of Electronics and Communication Engineering, Sardar Raja College of Engineering, Alangulam, Tirunelveli, Tamil Nadu, India

Abstract - The existing medical imaging technologies have little consideration on color information, thus most of medical images are gray. Classical hand-craft features-based methods have obtained unsatisfactory results in colorizing medical images. Moreover, these methods ignore the deep feature of medical images that represent pathology and color information. In this paper, we propose a novel method that iteratively colorizes grayscale medical images under preserving content in fine-tuned deep neural network. Specifically, we propose Y-loss which is defined as nonlinear combination of l1 and l2 norm to preserve content invariance between target and colorized medical image. Then, adaptive reference image search algorithm is introduced to code reference and target medical image with D-has hand search reference image in hash code automatically, which free the manual selection of the reference image. Extensive experiment results show that the proposed method can generate higher quality colored medical image than recent state-of-the-art methods, and can be approved by the doctor. The objective evaluation (PSNR and SSIM) outperform an average increment 24% and 47% than baseline method, respectively.

Keywords— Medical images enhance, color images, color transfer, deep neural network, automatic search.

INTRODUCTION

Color transfer is a widely used method in grayscale natural images process, which has been proved to be effective in images processing. The color of the reference image is transferred to the target image by choosing a suitable color image as a reference, so the target image has a similar color distribution with the reference one. There are many end-to end color transfer methods based on deep learning, but most of them are limited to transfer natural image. In the field of biomedical, there will yield many medical images every day with the popularization of medical diagnostic equipment such as computed tomography (CT), magnetic resonance imaging (MRI), ultrasound imaging (UI) and other diagnostic. These medical images can help doctors diagnose and analyze disease, and decide whether need surgery. Among them, medical image coloring is a common medical image processing direction. The color medical image has broad application prospects in the fields of image reconstruction, simulation, segmentation[2], virtual biopsy, virtual surgery and clinical image diagnosis reference, which can enhance the sense of visual reality and assist diagnosis. The color medical image can simulate the visual efferent of optical endoscope, and increase the intuitive feeling of virtual observation, which is conducive to the correct judgment of observation[3].It has been proved by clinical practice that pseudo-color images can highlight the details of organs and tissues better comparing with gray images[4], which can help doctors make correct judgment and avoid misjudgment [5], and also help for medical image segmentation [2]. The color medical image can help patients observe and understand medical images, which can increase effective communication between

doctors and patients, improve their relationship to reduce unnecessary conflicts between them.

PROBLEM FINDING:

Traditional colorization methods of medical image use hand-craft features to construct a color mapping. The hand-craft features prefer to expression the properties of the image, e.g., shape or color of the image. The deep features, extracted from deep neural network, can effectively extract semantic content from the medical image. These deep features consist of high-level and low-level features. High-level feature contains global context-aware information, which are more flexible than hand-craft features information [6]. And low-level features contain the spatial pixel details[7]. So deep features can both construct the content and color representations of the medical image. Nevertheless, due to the lack of paired training data, the end-to-end study of medical imaging colorization algorithms based on deep learning has not progressed. Therefore, it is still worthwhile to explore how to apply deep color transfer algorithm to the medical image field.

By analyzing the current research results of medical image coloring, there are three problems need to be solved to achieve accurate and satisfactory color medical images. Therefore, our work can be motivated from this currently three problems.

1.How to reduce the difference between human preference and medical images. Human preference refers that people prefer to read color image, but almost all the medical images are grayscale. Color medical images can reduce doctor's visual fatigue, and visualize the tissue area clearly [8].

2.How to make full use of low-and high-level feature during medical image colorization. At present, most of the medical image coloring only utilize hand-craft features, which may lose some important information [6]. To the best of our knowledge, has considered deep feature.

3.How to preserve content invariance between original and transferred medical image. Content invariance ensures that colored medical images still have diagnostic significance. In the process of coloring, the pixels value will be changed, which destroys the content details of the medical image so that yield meaningless colored medical images.

OUR CONTRIBUTIONS:

From a practical perspective, our approach is an effective algorithm for medical image colorization suitable for medical diagnosis and cleverly avoids the lack of paired training data problem. To preserve the content invariance, we combine hand-craft and deep features in the process of colorization. And we compare our method with other methods only with hand-craft features, our method take full advantage of the learning capability of deep CNN to extract deep features, which can avoid the paucity of representativeness of color and content of images. The colored medical image can satisfy the need of human preference, reduce visual fatigue of the doctor and promote communication between doctors and patients at the same time. The main contributions of this paper are summarized as follows:

1. Medical images are colored by using content and color representations extracted from deep neural network. These representations can both preserve content of grayscale medical image and extract color of the reference image. This colored medical image has more semantic information than colored ones by traditional methods. This is the first approach to color medical using deep

feature of image extracted from deep neural network.

2. The Y-loss function which is defined as nonlinear combination of `1 and `2 norm is reported to preserve details of physiological tissues invariance between target and colorized medical image in the colorization process. It is the guarantee for doctors to diagnosis by colored medical image.

3. The reference image is automatically retrieve by adaptive method which codes reference and target medical image with D-hash. This method avoid doctor operation and achieves fully automatic coloring.

RELATED WORK:

The existing methods of image colorization can be divided into two classes: one is the hand-craft-features-based colorization method, the other is deep-features-based method. An overview of topic can be summarized as followed.

HAND-CRAFT-FEATURES-BASED COLORIZED METHOD:

The core of hand-craft-features-based colorization method is the gray-to-color mapping constructed by the hand-craft features of image, such as pixel value, frequency and so on. Then, color the gray-scale image by this mapping relationship. There are proposed tremendous representative works. Firstly, this method combines Sobel operator with label watershed segmentation algorithm to highlight the tissues contours to obtain better pseudo-color processing results. Secondly, the Fourier transform-based frequency domain pseudo-color colorization technique is used to color the processed data. Zeng et al. [8] propose an image coloring method based on multi-feature fusion. Firstly, this method uses the Sobel operator to find the gradient features of medical images in four directions, and combine the luminance features to obtain a multi-feature vector for each pixel. Then, based on this vector, the K-nearest neighbor map is constructed to find the representative seed pixels, and construct the hierarchical structure. After the dimensional reduction of the topmost representative pixel, the low-dimensional representation of all pixels can be obtained by interpolation from the top to bottom. Lastly, the whole image have color information by the similarity relationship between pixels with color information and pixels without color. Finally the color is diffused to the whole image through the colored representative points. The research on medical image colorization has been uninterrupted, indicating that this field still has high research value. In addition, there are many methods to color grayscale images combined with the color transfer. Welsh et al. [11] propose a color transfer approach. This method obtain the best match between the reference and grayscale image by the luminance value and neighbourhood statistics of the pixel. Xiao and Ma [12] propose a method of color transfer in any color space. The pixel of the target image is transformed to adapt the reference image by the rotation matrix that obtained by the covariance matrix of the pixels. It uses the subtractive clustering to initialize the initial value of FCM, then uses FCM clustering to complete the segmentation of the source and the target image. Find the match between the two images, then transfer color. This method uses target scheme, which select directly or put the selected closet scheme by main color in the reference image, to color the target image. Although these methods achieve colorization of medical images, but all have the same limitation that only the hand-craft features of the image are used to color without considering the deep features of images.

DEEP LEARNING-BASED METHOD:

Recently, with the development of deep learning, convolutional neural network has shown a great potential in computer vision and image processing. Naturally, some incorporate CNN to automatically color images. Many automatic coloring methods are based on neural networks trained by a large number of datasets for special scenes. The coloring network consists of four sub-networks, which combines local and global features, to make gray natural images have real scene colors. Combine the U and V channel of an image, and obtained the value by pre-trained two neural networks respectively, with the brightness value Y to generate color image. However, it is very difficult to acquire enough color medical image datasets to train neural network. Training a colored neural network is not suitable for medical image. Therefore, we will not build and train a coloring neural networks. Very recently, the method combined with deep learning and color transferring have proposed. Some works show pre-trained networks can be used to generate image that the user expected by extracting deep features to construct and optimize the feature loss functions. In feature inversion [17], feature visualization [18], [19], image stylization [20]–[22] use this strategy [23]. This method does not require a large amount of training data to train a deep network. Considering the application scenario of this paper, it is decided to adopt the same image-based iterative method to color medical images. The feature reconstruction loss is constructed by using the features on the different layers, which includes the content loss (1) and the style loss (2). The content loss keeps content of the output image the same as the target image. The style loss (2) preserves style of the reference image. But the result of this method similar to abstract art between two realistic images. Subsequently, Li and Wand [24] propose an approach, which combines the markov random field model (MRF) with the pre-trained deep convolutional neural network, and enhances the spatial relationship between pixels. Therefore, texture distortion can be improved to some extent. But for the realistic image colorization, the better output image is produced because of the similar feature maps in high layer when two images with the similar appearance and size.

PROPOSED METHOD:

In this section, we present our proposed frame work in details. The frame work of our model consists of three parts: adaptive retrieval, colorization and imaging module. Adaptive retrieval strategy can retrieve a reference image as the input of the colorization module. Colorization module can generate a colored medical image as the input of the imaging module. Imaging module can restore colored image to size of original image and enhance its color. In the following, we first describe the details of the vital innovative part, which is the Y-loss LY and Local feature mapping L color swap applied in colorization module. Secondly, we introduce the adaptive retrieval strategy.

ADAPTIVE RETRIEVAL STRATEGY:

The adaptive retrieval strategy allows the coloring system to automatically retrieval an image as the reference image, thus eliminates human manipulation. We build two reference data sets (the pseudo-color dataset and real-human-slice dataset) for two different research purposes. One of the purpose is to highlight the different organs. The other is to restore the physical color of the organs as much as possible. According to different purposes, users can choose artificially. We use
hash retrieval method to retrieve the reference image based on the target image.

CONCLUSION:

In this paper, a novel colorization method of medical images has been proposed by combining deep learning with color transferring. The extensive results in multi-modal medical images, such as CT, MRI, and UIT, demonstrate the effectiveness of our method. We use Y-loss builded by hand-craft feature and content loss builded by deep feature to preserve content invariance of the target images. In multi-modal medical images data sets, compared with the methods using deep
and hand-craft features respectively, our method works better. Then, we add the automatic retrieval algorithm to avoid to
manually retrieve the reference images. Through the selection of different reference image datasets, our algorithm can achieve the purpose of obtaining false color or real physical colors to meet the needs of different people. Our result enhances the image texture feature information and improves the visual effect for clinicians, so our algorithm can apply to medical diagnostic equipment for getting colored medical image in theory. Therefore, the future work will focus on
cooperation with doctors or medical college to diagnosis and study diseases. We hope our algorithm will be used in clinical practice and education to improve relationships between
hospitals and patients and promote medical development.

REFERENCE:

1.W. Wei, B. Zhou,D. Poap,M. Woaniak."A regional adaptive variational PDE model for computed tomography image reconstruction". Pattern Recognition,vol.92, pp.64-81,2019.

2. M. U. G. Khan, Y. Gotoh and N. Nida, "Medical image colorization for better visualization and segmentation," Annual Conf. Med. Image
Understand. Anal. Cham, Switzerland: Springer, 2017, pp. 571-580.

3. T.H. Khan, S.K. Mohammed, M.S. Imtiaz, K.A. Wahid "Efficient color reproduction algorithm for endoscopic images based on dynamic color map". J. Med. Bio. Engineer., 2016, 36(2):226
´lC235.

4. C. Lan, P. Lan and Y. Cao, et al, "Pseudo-color processing of medical images," Chinese J. Stereology and image analysis, vol. 7, no, 3, pp. 166-167, Sep. 2002.

5. A.S. Noura."A Proposed HSV-based pseudo coloring scheme for enhancing medical images "Computer. Science Infor. Technology,pp.251-262,2018.

6. G. R. Wu et al, "Scalable High-Performance Image Registration Framework by Unsupervised Deep Feature Representations Learning," IEEE
Trans. Biomed. Eng., vol. 63, no. 7, pp. 1505-1516, July. 2016.

7. T. Zhao X. Wu, (2019,Mar). "Pyramid Feature Attention Network for Saliency detection", Presented at IEEE Conf. Comput. Vis. Pattern Recognit (CVPR),arXiv:1903.00179. [Online]. Available: https://arxiv.org/abs/1903.00179.

8. X. Zeng, A. Chen and M. Zhou, "Color perception algorithm of medical images using density peak based hierarchical clustering,"
Biomed. Signal Proces. Control, vol. 48, pp. 69-79, Feb. 2019. DOI:10.1016/j.bspc.2018.09.013.

9. C. Ning, "Medical Image Pseudo-color Processing Based on Object Enhancement," Journal of Changchun University of Science and Technology(Natural Science Edition), vol. 35, no. 4, pp. 185-187, Apr. 2012.

10. X. Zeng, A. Chen and S. He, "Color Perception Algorithm of Medical Images

Using Multi-features Fusion," J. Computer-Aided Design & Comput.Graph., vol. 30, no, 3, pp. 375-384, Mar. 2019

Electroencephatography Signal Classification for Object Detection using Feature Extraction Technique

S.Manju priya[1],K.Kousalya[2],B.Suruthi[3], P.Swetha[4]
[1,2,3,4] B.E Computer Science and Engineering, MRK Institute of Technology,kattumannar koil-608 301,Tamilnadu

Abstract - 1. This project are used to detect the objects based on EEG signal classification .

2. In previous work done by 1D Convolutional Neural Network(1DCNN) architecture.

3. The 1DCNN takes more time to train the dataset of EEG and it not fit for real time installation.

4. Here ,feature extraction and classification method used to implement the proposed work.

5. The both feature extraction and classification have better accuracy and good speed of training the dataset

6. This concept fully implanted using tensor flow (python3.6)

7. The deep learning packages tools are existed in software.

INTRODUCTION

It is well known in the neuroimaging community that both fMRI and EEG time series exhibit temporal auto correlations both in the short and long range regardless of experimental stimuli [9], [10]. Accordingly, to avoid confounding block-level effects with experimental effects, neuroscience studies employ designs that distribute each experimental condition across multiple blocks, or use temporally jittered stimuli to break the correlation structure, and/or use rapid event designs where stimuli are randomized at a single-trial level [11], [12]. However, despite the explosion of studies using machine learning techniques applied to neuroimaging data [13], [14], to our knowledge, the effects of EEG/fMRI temporal correlations on classification problems have not been examined by the machine-learning community. Here, we illustrate the far-reaching implications of such temporal correlations in EEG data and the importance of adherence to rigorous experiment design considerations by comprehensively analyzing the seemingly impressive claims made by a recent paper [1] and through a series of additional experiments carefully designed to elucidate the issues.

A recent paper [1] claims to (learn to) classify EEG data recorded from human subjects observing images from ImageNet [15] and use the learned classifier to train a pure computer-vision model. In that paper, images from Image-Net are presented as stimuli to human subjects undergoing EEG and a long short-term memory (LSTM [16]), combined with a fully connected layer and a ReLU layer, is trained to predict the class of the stimulus from the recorded EEG signal. The output of the ReLU layer is taken to reflect human neural encoding of the percept. The output of

existing object classifiers is then regressed to this purported human neuralencoding of the percept in an attempt to have computervision systems produce the same encoding of the percept.

That paper makes three specific claims [1, Section 1p. 6810]:

1. We propose a deep learning approach to classify EEG data evoked by visual object stimuli outperforming state-of-the-art methods both in the number of tackled object classes and in classification accuracy.
2. We propose the first computer vision approach driven by brain signals, i.e., the first automated classification approach employing visual descriptors extracted directly from human neural processes involved in visual scene analysis.

In this paper, we want to take a great leap forward with respect to classic BCI approaches, i.e., we aim at exploring a new and direct form of human involvement (a new vision of the "human-based computation" strategy) for auto-mated visual classification. The underlying idea is to learn a brain signal discriminative manifold of visual categories by classifying EEG signals—reading the mind–and then to project images into such manifold to allow machines to perform automatic visual categorization—transfer human visual capabilities to machines. The impact of decoding object category-related EEG signals for inclusion into computer vision methods is tremendous. First, identifying EEG-based discriminative features for visual categoriza- tion might provide meaningful insight about the human visual perception systems. As a consequence, it will greatly advance performance of BCI-based applications as well as enable a new form of brain-based image labeling.

Second, effectively projecting images into a new biologi-cally based manifold will change radically the way object classifiers are developed (mainly in terms of feature extrac-tion). [1, Section 1 pp. 6809–6810].

Here, we report a number of experiments and analyses that call these results and claims into question. Specifically, we find that the classifier employed makes extensive, if not sole, use of long-term static brain activity that persists much longer than the duration of individual stimuli. Since the paper employs a block design, where all stimuli of a given class are presented to a subject in succession, the classifiers employed tend to classify the brain activity during that block, which appears to be largely uncorrelated with stimulus class.

This is exacerbated by the reliance of the classifier on DC and very-low frequency (VLF) components in the EEG signal that reflect arbitrary long-term static mental states during a block rather than dynamic brain activity. Since each trial in the test sets employed comes from the same block as many trials in the corresponding training sets, the reported high classifica- tion accuracy results from classifying arbitrary temporal arti-facts of the data instead of stimulus-related activity. When the experiment is repeated with a rapid-event design, where stimuli of different classes are randomly intermixed, classifi- cation accuracy drops to chance. As a result, this renders sus-pect all of the results and claims advanced in multiplepublished papers [1], [2], [3], [4], [5], [6], [7], [8]. Our experi-ments suggest that the underlying tasks are far more difficult than they appear on the surface and are far beyond the cur-rent state of the art. This suggests caution in light of widelypublished [1], [2], [3], [4], [5], [6], [7], [8] sensational claims that are overly optimistic but incorrect. Finally, in Section 6, we scrutinize 122 recent papers that classify EEG data and find that a significant fraction are problematic in ways

described here.

Implementation

The OP1 Data Collection OP1 adopted the following experimental protocol. They selected 40 object classes from ImageNet [1, footnote 1] along with 50 images for each class. These were presented as stimuli to 6 human subjects undergoing EEG. A block design was employed. Each subject saw 40 blocks, each containing 50 image stimuli. Each image was presented exactly once. All 50 stimuli in a block were images of the same class. All subjects saw exactly the same 2,000 images. We do not know whether different subjects saw the classes, or the images in a class, in different orders.

The image presentation order for one subject was pro-vided to us by the authors. Each image was presented for 0.5 s. Blocks were separated by 10 s of blanking. Approxi-mately 40 ð50 0.5 s þ 10 sÞ ¼ 1400 s of EEG data were collected from 128 channels at 1 kHz with 16 bit resolution.

3.2 The OP1 Data Analysis

OP1 report that the EEG data was preprocessed by appli- cation of a second-order bandpass Butterworth filter (low cut-off frequency 14 Hz, high cut-off frequency 71 Hz) and a notch filter (49–51 Hz). The pass band was selected to include the Beta (15–31 Hz) and Gamma (32–70 Hz) bands, as they convey information about the cognitive processes involved in the visual perception [1, Section 3.1 p. 6812]. The data for all 6 subjects was pooled, segmented into trials of approximately 0.5 s duration, and divided into six training/validation/test-set splits. Each portion of each split contained data from all 6 subjects and all classes for all subjects. The data was z-scored prior to training and classification. An LSTM, combined with a fully connected layer and a ReLU layer, was applied to a 440 ms window of each trial starting 40 ms from stimulus onset. A variety of different architectural parameters were evaluated, the best of which achieved 85.4 percent validation accuracy and 82.9 percent test accuracy. OP1 claim that this is sig- nificantly higher classification accuracy for a significantly larger number of classes than all prior reported classifica- tion experiments on EEG data [17], [19], [20], [21], [22], [23], [24], [25], [26].

3.3 Reanalysis of the OP1 Data

We asked whether the significant improvement in classifica- tion ability was due to the classifier architecture employed by OP1 or whether it was due to some aspect of their experi- mental protocol and data collection procedure. OP1 have publicly released their code2 and data.3 This allowed us to verify their published results and to reanalyze their data with different classifiers to investigate this question. The released code yields (slightly better than) the published accuracy on the released data. OP1 have released their data in both Python and Matlab formats. Both formats are subsequent to segmentation. All results reported here were produced with the Python format data which was z-scored before processing. See Section 4 for details.

We reanalyzed the OP1 data with four different classi- fiers (Table 1): a k-nearest neighbor classifier (k-NN), a support vector machine (SVM [27]), a multilayer percep- tron (MLP), and a 1D convolutional neural network (CNN).4 The k-nearest-neighbor classifier used k ¼ 7 with a Euclidean distance on the 128 440 ¼ 56320 element vector associated with each trial. The SVM employed a linear kernel applied to data that was temporally down- sampled to 500 Hz, i.e., 128 220 ¼ 28160 element vec- tors. The MLP employed two fully connected layers with

a sigmoid activation function after the first fully con- nected layer, and no dropout, trained with a cross- entropy loss, applied to 128 440 ¼ 56320 element vec-
tors, with 128 hidden units. The 1D CNN (Fig. 1) processed each of the 128 channels independently with eight 1D CNNs of length 32 and stride 1. The 128 applications of each of the eight 1D CNNs shared the same parame-ters. The output of each was processed by an ELU, fol-lowed by dropout with probability of 0.5. This yielded a temporal feature stream of length 440 32 þ 1 ¼ 409 with 128 8 ¼ 1024 features per time point. This was then processed by a fully connected layer mapping each time point to a 40 element vector. The parameters were shared across all time points. This was then processed by average pooling along the time axis, independently for each of the 40 channels, with a kernel of length 128 and a stride of 64. This produced a feature map with 40 features for 5 time points. Dropout with probability 0.5 was then applied, followed by a fully connected layer with 40 out- puts. Training was performed with a cross-entropy loss.

For the LSTM, temporal EEG samples for a trial were pro- vided one-by-one as input to the classifier. For the 1D CNN, a matrix whose rows were channels and whose columns were temporal EEG samples for a trial was presented as input to the classifier. For the other classifiers, all temporal EEG samples for a trial were concatenated and presented as a single input vector.

New Data Collection

The above analyses suggest that the accuracy achieved by OP1 was not due to the analysis architecture but rather due to either the experimental protocol (block design, stimuli, and stimulus timing and presentation order) or the data collection effort (their laboratory apparatus—caps and acquisition hardware—used). We asked whether the accuracy was due to the former or the latter. To this end, we repeated the data collection effort. We collected data from six subjects. For each, we collected four kinds of data. The first two used the same 40 object classes and 2,000 image stimuli as OP1. The second two used the 12 activity classes and a subset of the video clips from Hollywood 2 as described in Siskind [29]. The subset of clips was selected to be counterbalanced, with 32 clips per class, temporally cropped to a uniform 4 s duration centered around the activity class depicted, and transcoded to a uniform spatial and temporal resolution. We repeat all of our experiments and analyses on both image and video stimuli to investigate whether the issues that arise are par- ticular to the task of classifying object perception (nouns) or whether they also arise in the task of classifying activity perception (verbs).

Data was collected with two different paradigms for each set of stimuli. One paradigm used a block design, where all stimuli of a given class were shown together
in a single block. The other paradigm used a rapid-event design, where the stimuli were presented in randomized order.

For subject 1, we collected the block data once, thus collecting four recordings: one image block, one image rapid event, one video block, and one video rapid event. For sub-
jects 2–5, we collected the block data twice, both with the same stimulus presentation order, thus collecting six recordings per subject: two image block, two video block, one image rapid event, and one video rapid event. For subject 6, we collected the block data three times, the first two with the same stimulus presentation order and the third with a different order. This alternate order varied both the order in which the classes were

presented as blocks and the order in which the stimuli within a class were presented within a block. Thus for subject 6, we collected eight recordings: three image block, three video block, one image rapid event, and one video rapid event. The data for subject 1 was collected in two sessions (one capping for each), one forimage stimuli and one for video stimuli. The data for each remaining subject was collected in a single session with a single capping. Since all analyses on our data are within subject and just on images or just on video, no alignment was necessary.

Regression

In support of claim 2, Spampinato et al. [1, Sections 3.3 and 4.2] report an analysis whereby they use the LSTM, com- bined with a fully connected layer and a ReLU layer, that was trained on EEG data as an encoder to produce a 128-element encoding vector for each image in their dataset. They then regress the 1,000-element output representation from a number of existing deep-learning object classifiers that have been pretrained on ImageNet to produce the same encoding vectors. When training this regressor, in some instances, they freeze the parameters of the existing deep-learning object classifiers, while in other instances they fine tune them while learning the regressor. They report a mean square error (MSE) between 0.62 and 7.63 on the test set depending on the particulars of the model and training regimen [1, Table 4]. They claim that this result supports the conclusion that this is the first human brain–driven automated visual classification method and thus enables automated visual classification in a "brain-based visual object manifold" [1, Section 5 p. 6816].

Note that OP1 use the same LSTM combined with a fully connected layer and a ReLU layer both as a classifier and as an encoder. During training as a classifier, the out- put of the last layer of the classifier, namely the ReLU, is trained to match the class label. Thus using such a trained classifier as an encoder would tend to encode EEG data in a representation that is close to class labels. Crucially, the output of the classifier taken as an encoder contains mostly, if not exclusively, class information and little or no reflection of other non-class-related visual information. Further, since the output of their classifier is a 128-ele- ment vector, since they have 40 classes, and since they train with a cross-entropy loss that combines log softmax with a negative log likelihood loss, the classifier tends to produce an output representation whose first 40 elements contain an approximately one-hot-encoded representation of the class label, leaving the remaining elements at zero. Indeed, we observe this property of the encodings produced by the code released by OP1 on the data released by OP1 (Fig. 3 in the Appendix in the supplementary material), available online. Note that the diagonal nature of Fig. 3 in the Appendix in the supplementary material, available online, reflects an approximate one-hot class encoding. Any use of a classifier trained in this fashion as an encoder would have this property. Spampinato et al.

[1, Sections 3.3, 4.2, and 4.4] use such an encoder to train an object classifier with EEG data, Palazzo et al. [3], Kava- sidis et al. [4], and Tirupattur et al. [7] use such an encoder to train a variational autoencoder (VAE) [30]

or a generative adversarial network (GAN) [31] to produce images of human perception and thought, andPalazzo et al. [8] use such an encoder to produce saliency maps, EEG activation maps, and to measure association between EEG activity and layers in an object detector.

Thus all this work is essentially driven by encodings of class information that lack any visual information or any representation of brain processing.

Conclusion

The results in Tables 5 and 7 suggest that the ability to classify 40 object classes in image stimuli and 12 activity classes in video stimuli from an EEG signal is extremely difficult and well beyond the current state of the art. Moreover, the enterprise of using neuroimaging data to train better computer-vision systems, proposed by [35, Section 8 p. 625] and [29, Fig. 2 and Section 3 last paragraph p. 4068], requires more sophisticated methods than simply attaching a regressor to a pretrained object classifier and is also likely to be difficult and beyond the current state of the art. Both of these enterprises are the subject of substan- tial ongoing effort. When widely published [1], [2], [3], [4], [5], [6], [7], [8], inordinately optimistic claims can lead to misallocation of valuable resources and can sideline more modest but legitimate and important advances in the field.

Thus, when the sensational claims are recognized as incorrect, it is imperative that the refutation be widely publicized to appropriately caution the community. Further, when the community as a whole appears to suffer from widespread but problematic practices, it is even more imperative that this warning be widely publicized to appropriately caution the community.

References

[1] C. Spampinato, S. Palazzo, I. Kavasidis, D. Giordano, N. Souly, and M. Shah, "Deep learning human mind for automated visual classification," in Proc. IEEE Conf. Comput. Vis. Pattern Recognit., 2017, pp. 6809–6817.

[2] C. Spampinato, S. Palazzo, I. Kavasidis, D. Giordano, M. Shah, and N. Souly, "Deep learning human mind for automated visual classification," 2016, arXiv:1609.00344.

[3] S. Palazzo, C. Spampinato, I. Kavasidis, D. Giordano, and M. Shah, "Generative adversarial networks conditioned by brain signals," in Proc. IEEE Int. Conf. Comput. Vis., 2017, pp. 3410–3418.

[4] I. Kavasidis, S. Palazzo, C. Spampinato, D. Giordano, andM. Shah, "Brain2Image: Converting brain signals into images," in Proc. 25th ACM Int. Conf. Multimedia, 2017, pp. 1809–1817.

[5] C. Du, C. Du, X. Xie, C. Zhang, and H. Wang, "Multi-view adver- sarially learned inference for cross-domain joint distribution matching," in Proc. Int. Conf. Knowl. Discov. Data Mining, 2018, pp. 1348–1357.

[6] P. Kumar, R. Saini, P. P. Roy, P. K. Sahu, and D. P. Dogra, "Envisioned speech recognition using EEG sensors," Pers. Ubiqui- tous Comput., vol. 22, no. 1, pp. 185–199, 2018.

[7] P. Tirupattur, Y. S. Rawat, C. Spampinato, and M. Shah, "ThoughtViz: Visualizing human thoughts using generative adversarial network," in Proc. 26th ACM Int. Conf. Multimedia, 2018, pp. 950–958.

[8] S. Palazzo, C. Spampinato, I. Kavasidis, D. Giordano, and M. Shah, "Decoding brain representations by multimodal learning of neural activity and visual features," 2018, arXiv:1810.10974.

[9] K. Linkenkaer-Hansen, V. V. Nikouline, J. M. Palva, and R. J. Ilmoniemi, "Long-range temporal correlations and scaling behavior in human brain oscillations," J. Neurosci., vol. 21, no. 4, pp. 1370–1377, 2001.

[10] E. Bullmore et al., "Colored noise and computational inference in neurophysiological (fMRI) time series analysis: Resampling meth- ods in time and wavelet domains," Hum. Brain Mapping, vol. 12,pp. 61–78, 2001.

Ergonomics Problems and Risk Assessment in process Industry

K. Kajesh [1]
[1,2,3,4] B Department of Industrial Safety Engineering, NSN College of Engineering and Technology, Karur, India

Abstract - Ergonomics is one of the most important elements which influence both productivity and the quality of worker's output. Avoidance the ergonomic consideration while designing the work and work process increasing the risk among workers which may cause temporary (or) chronic Musculoskeletal disorder (MSD). The main purpose of this paper is to identify the relationship ergonomic problem and risk assessment in manufacturing and process industry workers. This research consists of quantitative research conducted in Saint-Gobain, Perundurai. The company workers were analyzed in the data analysis process. Findings have shown that work design, work process design, workload, noise level and ergonomic issues have a significant and positive relationship on risk assessment among respondent. The risk and ergonomic issues were detailly analyzed by using Sound Level Meter (SLM), Dose batch and RULA & REBA based assessment tool. However, change in engineering design and operation of machines, minimizes the ergonomic issue and risks, gave a better result.

Keywords: ergonomic factors; manufacturing sector; work process design; SLM; noise level; RULA & REBA tool.

INTRODUCTION

Working life is full of hassles, deadlines, demands and frustrations. For many workers, poor ergonomics has become an ever-present factor in their industry. Ergonomics is an interaction between an individual and the working environment. But when one is constantly running in poor ergonomic mode, the mind and body pay the price. Ergonomics considers both physical and psychological human aspects. It may cause repetitive strain injuries and mental strains. Poor ergonomic may lead to serious mental and physical health problems like temporary and chronic Musculoskeletal Disorder (MSD). It could also affect relationships at home and work. The value of ergonomics extends beyond health and safety. Good ergonomics gives a solution in both technical and organizational domains. It reduces the overall cost and helps to increase the production.

LITERATURE REVIEW

Ergonomics has been defined as a multidisciplinary science that seeks to comfort the workplace and all of its physiological aspects to the worker (Goetsch, 2005). Ergonomics used design and evaluation techniques to make tasks, objects, and environments more compatible with human abilities and their limitations. Ergonomics also seeks to improve productivity and quality by reducing workplace stressors, reducing the risk of injuries and illnesses, and increasing efficiency (Carayon, 2011).

In modern times ergonomics have become a major source of stress for employees in an organization. In ergonomics, there are stressors that have a negative impact on the performance of employees. Poor design of work, including work process, workstation design, shift work, humidity, and long working hours could increase the stress level among the workers caused by the ergonomic factors (Zafir, 2012). This could increase the

likelihood of ergonomic illness such as cumulative trauma disorders (CTD), repetitive strain injuries (RSI), back pain, shoulder pain, fatigue, and others illness (Karwowski, 2001).

A better physical environment at the workplace can boosts the employees and ultimately improve their productivity. Experience has conclusively demonstrated that organizations with good working conditions out produce those with poor conditions. The economic return from investment in an improved working environment is usually significant. In addition to increasing production, ideal working conditions improve the safety record, reduce absenteeism, tardiness, and labor turnover, raise employee morale, and improve public relation (Freivalds & Niebel, 2009).

Results from studies concerning the factors contributing to stress have been mixed (Sauter, Murphy, & Hurrell, 1990; National Institute of Occupational Safety and Health (NIOSH), 2014), but it is clear that ergonomic factors have a significant relation and influence on stress (Karwowski, 2001; Zafir & Durrishah, 2009; Loo & Richardson, 2012). Although ergonomic consideration have been routinely practiced in designing the work and work station the high-income countries for a long time, but in Malaysia it has been difficult to implement it in most companies due to lack of management commitment and budget (Loo & Richardson, 2012). The aim of this study is to identify the relationship between ergonomic factors and stress among workers.

A cost-benefit analysis method for calculating the cost of employment is described. The purpose of the analysis is to portray, in financial terms, the benefits to health, productivity, and quality brought about by improved working conditions.The analysis can be used to measure the financial benefits after the completion of changes to working conditions, or it can be used to show the potential value of proposed expenditure (improvements to working conditions) and thus compete for resources on an equal footing with other enterprise proposals. The cost-benefit analysis may also be used as a sensitivity analysis to detect areas of high labor cost (e.g., high injury absences) and/or productivity losses (e.g., low quality of service or product) and thus to direct workplace improvements toward these areas, if appropriate. (Oxenburgh, Maurice S. 1997)

METHODOLOGY

Overall process of Refractory block Manufacturing

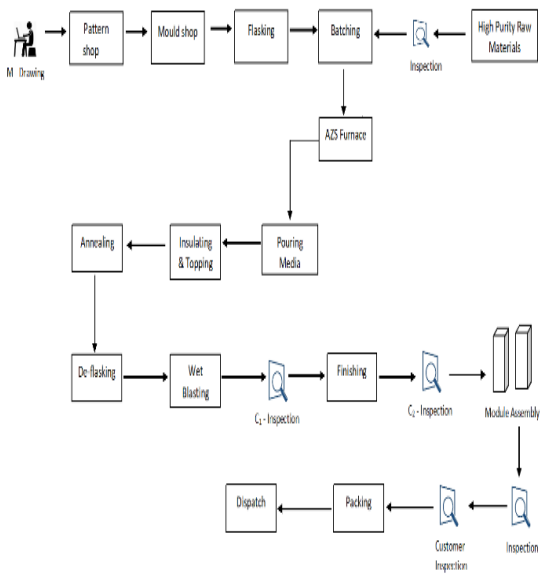

Fig 1: Refractory block Manufacturing from sand mixture (ZrO_2, $Al2O_3$ and SiO_2)

PROCESS DESCRIPTION

Figure 1. shows the standard and regular procedure of refractory block manufacturing from ZrO2, Al2O3 and SiO2.

M – DRAWING

The diagram helps to design the size and dimensions of the plywood pattern which was

used to make electro fused refractories. It is also known as Manufacturing drawing.

PATTERN & MOULD SHOP

A plywood module was created by the reference of M – drawing. The pattern was filled by the mixture of silica sand, furfural resin (1%) and catalyst (30-40 %)

FLASKING

The dried mould, fixed on the bin and the mould was tied with chill plates (which helps for slow release of temperature from the bin). Finally, grog was added to the entire bin.

RAW MATERIALS

The raw materials which is used for making elctrofused refractories is mostly Zirconia, Alumina and Silica (ZrO2, Al2O3 and SiO2). Usually, it is imported from abroad and some from northern part of india.

BATCHING

Quality check for the raw material was checked and the qualified batch of raw materials added a particular composition which was instructed by technical department. According to that, a mixture was prepared at batching plant

AZS FURNACE

A furnace is a setup of three graphite electrodes which was named as alpha, beta and gamma. The batching plant raw material was added to the furnace by using the bucket elevator and melted by using high electro voltaic temperature (up to 1800˚C using 30KV power). It takes nearly 40 minutes to completely melt one batch of raw materials. The melt was poured in a pouring media (flasked mould) and the sand mixture (ZrO2, Al2O3 and SiO2) were topped at the top of the surface.

ANNEALING

Annealing is the heat treatment process used mostly to increase the ductility and reduce the hardness of the material. The poured media kept for an annealing period for 7 - 10 days for small and medium size blocks. For, large size blocks (or) more weighted block it take 23 -27 days annealing period to reduce the high amount of heat to normal handling temperature.

DE-FLASKING & WET BLASTING

Removal of grog and chill plates which was used in flasking to make the pouring media much stronger. The produced block was removed and cleaned using wet blasting method. A high pressurized water (up to 400 bar pressure) which was used to remove the dust and impurities present on the refractory block. The block pours and molecular strength and structure was checked before move to finishing process.

FINISHING

The accepted blocks further process like refractory block headers were cut off by using cutting machines and further process like milling, grinding, critical cutting, drilling and polishing process were done by the concern machines.

ASSEMBLY

The processed and accepted blocks from finishing area were checked for the shape and dimensions. Then it was arranged accordingly to its final M - drawing module and type.

Sound Level Meter (SLM) Readings in Finishing Area

Machine Name	Condition (dBA)		Motor (dBA)	With Load (dBA)	Hori. Motor (dBA)	Verti. Motor (dBA)	Filter press pump (dBA)	Water pump (dBA)	Blower (dBA)
	OFF	ON							
VBS - 2A	79.9 dBA	84.7 dBA	96.4 dBA	98.8 dBA	85.5 dBA	NA	84.2 dBA	83.6 dBA	NA
VBS - 2B	78.4 dBA	87.2 dBA	96.8 dBA	99.4 dBA	84.6 dBA	NA	83.8 dBA	84.1 dBA	NA
VBS - 2C	81.4 dBA	85.9 dBA	95.2 dBA	101.4 dBA	85.6 dBA	NA	83.5 dBA	83.8 dBA	NA
Bridge Grinder – 1	80.6 dBA	85.4 dBA	96.3 dBA	98.8 dBA	NA	NA	84.2 dBA	84.5 dBA	NA
Bridge Grinder – 2	77.8 dBA	84.8 dBA	97.1 dBA	98.4 dBA	NA	NA	83.8 dBA	83.6 dBA	NA
Radial Drilling Machine – 1	80.3 dBA	84.6 dBA	92.7 dBA	99.7dBA	NA	84.2 dBA	NA	83.4 dBA	NA
Radial Drilling Machine – 2	79.2 dBA	83.8 dBA	91.4 dBA	104.2 dBA	NA	83.6 dBA	NA	84.2 dBA	NA
Radial Drilling Machine – 3	81.4 dBA	85.1 dBA	93.3 dBA	102.3 dBA	NA	84.7 dBA	NA	84.1 dBA	NA
Polishing Machine - 1	79.8 dBA	83.9 dBA	86.7 dBA	97.2 dBA	NA	84.6 dBA	NA	83.3 dBA	NA
Polishing Machine - 2	77.8 dBA	82.4 dBA	87.8 dBA	98.7 dBA	NA	85.4 dBA	NA	82.1 dBA	NA
Polishing Machine - 3	80.2 dBA	84.3 dBA	86.2 dBA	97.6 dBA	NA	84.5 dBA	NA	83.6 dBA	NA
VRSG - 1	79.8 dBA	84.7 dBA	96.8 dBA	100.8 dBA	NA	NA	84.3 dBA	83.5 dBA	84.7 dBA
VRSG – 2	78.6 dBA	87.3 dBA	96.4 dBA	99.7 dBA	NA	NA	83.6 dBA	84.2 dBA	85.6 dBA
VRSG – 3	81.4 dBA	85.4 dBA	95.8 dBA	101.4 dBA	NA	NA	83.4 dBA	83.7 dBA	86.4 dBA
VRSG – 6	79.5 dBA	84.8 dBA	96.7 dBA	101.8 dBA	NA	NA	84.1 dBA	83.6 dBA	84.3 dBA
VRSG – 7	81.6 dBA	86.7 dBA	97.2 dBA	98.4 dBA	NA	NA	84.6 dBA	84.3 dBA	85.6 dBA
VRSG – 8	78.7 dBA	86.2 dBA	96.2 dBA	99.2 dBA	NA	NA	83.9 dBA	84.6 dBA	84.8 dBA
VRSG – 10	80.2 dBA	85.7 dBA	96.3 dBA	98.2 dBA	NA	NA	86.3 dBA	85.1 dBA	84.1 dBA
VRSG – 11	79.2 dBA	87.4dBA	96.6 dBA	101.4 dBA	NA	NA	85.7 dBA	83.8 dBA	87.7 dBA
VRSG - 12	80.6 dBA	86.7 dBA	97.4 dBA	99.6 dBA	NA	NA	83.9 dBA	84.3 dBA	86.1 dBA
VRSG* – 5	79.4 dBA	85.1 dBA	93.2 dBA	97.2 dBA	NA	NA	81.6 dBA	82.3 dBA	83.8 dBA
VRSG* – 9	78.6 dBA	87.3 dBA	96.4 dBA	99.7 dBA	NA	NA	83.6 dBA	84.2 dBA	85.6 dBA

Tab 1 (a): SLM initial readings in finishing area machines

Machine Name	Condition (dBA)		Motor (dBA)	With Load (dBA)	Hori. Motor (dBA)	Verti. Motor (dBA)	Filter press pump (dBA)	Water pump (dBA)	Blower (dBA)
	OFF	ON							
VBS - 2A	79.9 dBA	84.7 dBA	96.4 dBA	98.8 dBA	85.5 dBA	NA	84.2 dBA	83.6 dBA	NA
VBS - 2B	78.4 dBA	87.2 dBA	96.8 dBA	99.4 dBA	84.6 dBA	NA	83.8 dBA	84.1 dBA	NA
VBS - 2C	81.4 dBA	85.9 dBA	95.2 dBA	97.8 dBA	85.6 dBA	NA	83.5 dBA	83.8 dBA	NA
Bridge Grinder – 1	80.6 dBA	85.4 dBA	96.3 dBA	98.8 dBA	NA	NA	84.2 dBA	84.5 dBA	NA
Bridge Grinder – 2	77.8 dBA	84.8 dBA	97.1 dBA	98.4 dBA	NA	0	83.8 dBA	83.6 dBA	NA
Radial Drilling Machine – 1	80.3 dBA	84.6 dBA	92.7 dBA	99.7dBA	NA	84.2 dBA	NA	83.4 dBA	NA
Radial Drilling Machine – 2	79.2 dBA	83.8 dBA	91.4 dBA	98.2 dBA	NA	83.6 dBA	NA	84.2 dBA	NA
Radial Drilling Machine – 3	81.4 dBA	85.1 dBA	93.3 dBA	98.5 dBA	NA	84.7 dBA	NA	84.1 dBA	NA
Polishing Machine - 1	79.8 dBA	83.9 dBA	86.7 dBA	97.2 dBA	NA	84.6 dBA	NA	83.3 dBA	NA
Polishing Machine - 2	77.8 dBA	82.4 dBA	87.8 dBA	98.7 dBA	NA	85.4 dBA	NA	82.1 dBA	NA
Polishing Machine - 3	80.2 dBA	84.3 dBA	86.2 dBA	97.6 dBA	NA	84.5 dBA	NA	83.6 dBA	NA
VRSG - 1	79.8 dBA	84.7 dBA	96.8 dBA	96.4 dBA	NA	NA	84.3 dBA	83.5 dBA	84.7 dBA
VRSG – 2	78.6 dBA	87.3 dBA	96.4 dBA	99.7 dBA	NA	NA	83.6 dBA	84.2 dBA	85.6 dBA
VRSG – 3	81.4 dBA	85.4 dBA	95.8 dBA	97.1 dBA	NA	NA	83.4 dBA	83.7 dBA	86.4 dBA
VRSG – 6	79.5 dBA	84.8 dBA	96.7 dBA	97.6 dBA	NA	NA	84.1 dBA	83.6 dBA	84.3 dBA
VRSG – 7	81.6 dBA	86.7 dBA	97.2 dBA	98.4 dBA	NA	NA	84.6 dBA	84.3 dBA	85.6 dBA
VRSG – 8	78.7 dBA	86.2 dBA	96.2 dBA	99.2 dBA	NA	NA	83.9 dBA	84.6 dBA	84.8 dBA
VRSG – 10	80.2 dBA	85.7 dBA	96.3 dBA	98.2 dBA	NA	NA	86.3 dBA	85.1 dBA	84.1 dBA
VRSG – 11	79.2 dBA	87.4dBA	96.6 dBA	96.9 dBA	NA	NA	85.7 dBA	83.8 dBA	87.7 dBA
VRSG - 12	80.6 dBA	86.7 dBA	97.4 dBA	99.6 dBA	NA	NA	83.9 dBA	84.3 dBA	86.1 dBA
VRSG* – 5	79.4 dBA	85.1 dBA	93.2 dBA	97.2 dBA	NA	NA	81.6 dBA	82.3 dBA	83.8 dBA
VRSG* – 9	78.6 dBA	87.3 dBA	96.4 dBA	99.7 dBA	NA	NA	83.6 dBA	84.2 dBA	85.6 dBA

Tab 1 (b): SLM readings after engineering control in finishing area machines

RULA – RELA tool based ergonomic assessment readings

Risk Assessment	Re-design of workplace is not needed	Re-design of workplace is recommended	Re-design of workplace is necessary
Posture - Force - Motion	0-2	3-4	≥5
Manual Handling (MH) of Loads: Lifting - Carrying	0-24	25-49	≥50
Manual Handling (MH) of Loads: Pushing - Pulling	0-24	25-49	≥50
Final Risk Score	8	84	240

Tab 2 (a): Risk assessment score criteria

Work Station	Job	Task	Score			Final Risk Score
			Posture - Force - Motion	Manual Handling (MH) of Loads: Lifting - Carrying	Manual Handling (MH) of Loads: Pushing - Pulling	
Graphite Mould Shop	Graphite Taking	Graphite Taking	0	108	13	240
Pattern Shop	Header Making	Header Making	5	0	0	240
RM Shed	Bag Cutting	Bag Cutting	0	220	78	240
RN Station	RN Chill Plate Lifting	RN Chill Plate Lifting	0	32	0	84
RN Station	Wet Blasting	Wet Blasting	8	5	5	240
RT Station	RT Chill Plate Lifting	RT Chill Plate Lifting	0	32	0	84
RM Shed	Unloading Raw Materials	Unloading	7	174	98	240
Finishing	Bridge Grinder – 2	Grinding	4	0	0	84
Finishing	Radial Drilling Machine – 2	Drilling	5	0	9	240
Finishing	Edge Grinder – 1	Grinding	4	0	0	84
Finishing	Merkle Saw	Cutting	2	24	75	240
Finishing	Polishing Machine – 2	Polishing	5	0	18	240
Finishing	VBS – 3A	Cutting	4	0	0	84
Finishing	VRSG – 1	Milling	2	0	0	8

Tab 2(b): RULA–RELA tool based initial ergonomics assessment readings

Work Station	Job	Task	Score			Final Risk Score
			Posture - Force - Motion	Manual Handling (MH) of Loads: Lifting - Carrying	Manual Handling (MH) of Loads: Pushing - Pulling	
Graphite Mould Shop	Graphite Taking	Graphite Taking	0	45	13	84
Pattern Shop	Header Making	Header Making	4	0	0	84
RM Shed	Bag Cutting	Bag Cutting	0	48	35	84
RN Station	RN Chill Plate Lifting	RN Chill Plate Lifting	0	32	0	84
RN Station	Wet Blasting	Wet Blasting	4	5	5	84
RT Station	RT Chill Plate Lifting	RT Chill Plate Lifting	0	32	0	84
RM Shed	Unloading Raw Materials	Unloading	3	38	43	84
Finishing	Bridge Grinder – 2	Grinding	4	0	0	84
Finishing	Radial Drilling Machine – 2	Drilling	3	0	9	84
Finishing	Edge Grinder – 1	Grinding	4	0	0	84
Finishing	Merkle Saw	Cutting	2	24	45	84
Finishing	Polishing Machine – 2	Polishing	4	0	18	84
Finishing	VBS – 3A	Cutting	4	0	0	84
Finishing	VRSG – 1	Milling	2	0	0	8

Tab 2(c): RULA–RELA tool based final ergonomics assessment readings

Initially, an ergonomic issues and risks were detailly analyzed and recorded accordingly. Based on that data, identified noise and physical work due to bad ergonomic condition are the high-risk activity. The noise level was mapped all over the plant and found it was more than 95 dBA. Using that data, the machine was covered with a guard and changed machine operating RPM. It minimized the noise level and it came to the industry acceptable noise exposure level below 90 dBA. The workers working hours per day and their physical exposure to the work was completely studied and score calculated using RULA-REBA based ergonomic screening tool. It consists of posture-force-motion, pushing-pulling, lifting-carrying. The risk assessment was done by hierarchy of controls method which includes elimination, substitution, engineering controls, administrative controls and proper usage of personal protective equipment (PPE's). The high-risk works was shortlisted & fixed, making changes in standard

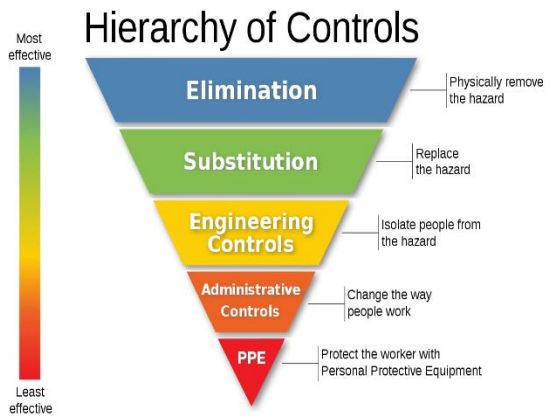

Fig 2: Hierarchy based risk assessment

operating procedure (SOP), key point safety for the work and also change in postures. After the successful implementation of these system, an ergonomic risk was reduced very effectively and shows the better results than the previous.

DISCUSSION

Table 1(b) and 2(c) shows that ergonomic risks (noise and bad working conditions) were found and encountered with the help of Fig 2: hierarchy of controls by making proper engineering measures and controls like change in design, work process control, increasing the manpower for a specific work (or) task, elimination of critical work (or) alternative solution, changing the workers frequently who are expose to bad ergonomic situations.

CONCLUSION

The purpose is this project is to identify the ergonomics problems and risk factors among process industry workers. According to that, a detailed analysis was conducted among workers, found that noise and posture are the major ergonomic issues. A complete mapping data collected by using Sound Level Meter (SLM), dose batch and ergonomic screening tool. Based on these data an engineering controls (change in design) and behavioral controls like periodical maintenance, change in Standard Operating Procedure (SOP), machine guard (to minimize the noise level) was implemented. After that implementation the posture and noise-based issues reduced from 78% to 45%

ACKNOWLEDGMENT

I acknowledge Saint-gobain, perunduari and NSN college management who gave support to this project, my father Mr. P. Thirumurugan and my friends who helped in this project

REFERENCES

1. Jaffar, N., Abdul-Tharim, A. H., Mohd-Kamar, I. F., Lop, N. S., A Literature Review of Ergonomics Risk Factors in Construction Industry, The 2nd International Building Control Conference 2011. Journal of Procedia Engineering, Vol. 20 (2011), p.89.
2. Carayon, P. (2011). Handbook of human factors and ergonomics in health care and patient safety. London: CRC Press. London: CRC Press.
3. Costa, G. (2003). Factors influencing health of workers and tolerance to shift work. Theoretical issues in ergonomics science. 4(3-4), 263-288.
4. Dembe, A. E., Erickson, J. B., Delbos, R. G., & Banks, S. M. (2005). The impact of overtime and long work hours on occupational injuries and illnesses: new evidence from the United States.Occupational and environmental medicine 62(9), 588-597.
5. Freivalds, A., & Niebel, B. W. (2009). Niebel's methods, standards and work design. New York: McGraw Hill International Edition
6. Karwowski, W. (2001). Internationalencyclopedia of ergonomics and humanfactors (Vol. 3). London: CRC Press.
7. Stanton, N. A., Hedge, A., Brookhuis, K., Salas, E., Hendrick, H., Handbook ofHuman Factors and Ergonomics Methods. 2005, CRC Press LLC, Brunel University, Uxbridge, London, UK.
8. Van der Mole, H. F., Sluiter, J. K., Frings -Dresen, M. H. W., Behavioural change phases of different stakeholders involved in the implementation process of ergonomicsmeasures in bricklaying. Journal of Applied Ergonomics, Vol. 36 (2005), p.449.
9. U.S. Department of Labor, Occupational Safety and Health Administration (OSHA), 3125, Ergonomics: The Study of Work. 2000 (Revised).
10.Hess, J. A., Hecker, S., Weinstein, M., Lunger, M., A participatory ergonomics intervention to reduce risk factors for low back disorders in concrete laborers. Journal of Applied Ergonomics, Vol. 35 (2004), p.427

Health Monitoring system using IoT

Jaganathan V [1], Kowsalya P [2], Premkumar R [3], Ramkumar V S[4]
[1] Student, Electrical and Electronics department, sns college of technology, tamil nadu, India
[2]Professor, Electrical and Electronics department, sns college of technology, tamil nadu, India

Abstract - Health has prime importance in our day-to-day life. Sound health is necessary to do the daily work properly. This project aims at developing a system which gives body temperature and heart rate using LM35 and pulse sensor respectively and it can primarily used in hospitals or monitoring health for aged persons. These sensors are interfaced with controller Arduino uno board. Wireless data transmission done by Arduino through wifi module. ESP8266 is used for wireless data transmission on IoT platform i.e. thing speak. Data visualization is done on Thing speak. So that record of data can be stored over period of time .This data stored on web server so that it can see to who logged.

INTRODUCTION

In the recent years wireless technology has increasing for the need of upholding various sectors .In these recent years IoT graped the most of industrial area specially automation and control. Biomedical is one of recent trend to provide better health care. Not only in hospitals but also the personal health caring facilities are opened by the IoT technology. So having a smart system various parameters are observed that consumes power, cost and increase efficiency. In according to this smart system , this paper is reviewed.

In traditional method, doctors play an important role in health check up. For this process requires a lot of time for registration, appointment and then check up. Also reports are generated later. Due to this lengthy process working people tend to ignore the checkups or postpone it. This modern approach reduces time consumption in the process.

In the recent years use of wireless technology is increasing for the need of upholding various sectors .In these recent years IoT groped the most of industrial area specially automation and control. Biomedical is one of recent trends to provide better health care. Not only in hospitals but also the personal health care facilities are opened by the IoT technology. So having a smart system, various parameters are observed that consume power, cost and increase efficiency .In accordance with this smart system, this paper is reviewed.

Medical scientists are trying in the field of innovation and research since many decades to get better health services and happiness in human lives.
Their contribution in medical area is very important to us and cannot be neglected. Today's automotive structures have the root ideas coming from yesterday's basics. Also Early detection of chronic diseases can be easy with these technology.

The body temperature, heart rate, blood pressure, respiration rate are prime parameters to diagnose the disease. This project gives temperature and heart rate values using IoT.

MOTIVATION

In rural hospitals, the facilities for health caring are limited. The poor quality of health management enables issues in health care system Everyone should get the knowledge of own health as easy and early as possible. Also it should be worth for each. Latest report of The India Spend analysis of data says that the

500,000 doctors shortage in India. WHO defines the doctor patient ratio will be 1:1000 which has been failed in India.

In developing countries there is lack of resources and management to reach out the problems of individuals. A common man cannot afford the expensive and daily check up for his health. For this purpose various systems which give easy and assured caring unit has been developed. Theses system reduces time with safely handled equipment.

RELATED WORK

Modern health care system introduces new technologies like wearable devices or cloud of things. It provides flexibility in terms of recording patients monitored data and send it remotely via IOT. For this connection, there is need of secure data transmission. To transmit the data with privacy is the Moto of this paper. The proposed system introduces security of health care and cloud of things
.System works in two major parts viz. storage stage and data retrieving stage. In storage stage, data is stored, updated for future use. In data retrieving stage, retrieve data from cloud. The cloud server can share with authenticated user as per request. A patient with wearable devices continually updates his record every 5 or 10 min. In emergency mode, it updates for every 1min.The wearied device will send results to phone using Bluetooth connection or NFC technology. This can able to give to cloud server using GSM and 3G.

At cloud server, each patient is defines with unique address. So data at cloud can authenticate the right patient and provide the required request.[1]

Telemonitoring system via WBAN is evolving for the need for home based mobile health and personalized medicine. WBAN can able to collect the data acquired from
sensor and record the output. This output results sent to controller wirelessly to health monitoring system. In this paper, Zigbee is used to in WBAN technology due to its guaranteed delay requirement for health telemonitoring system. Zigbee used in the communication.

Afef Mdhaffar, Tarak Chaari, Kaouthar Larbi, Mohamed Jmaiel and Bernd Freisleben has explained low power WAN network to perform analysis of monitored data in health caring system. They have established WAN network for communication upto the range of 33m2 at around 12 m altitude. Also they have demonstrated that power consumed by LoRaWAN network is ten times less than the GPRS/3G/4G.The IOT architecture has been given for step wise working for understanding of IOT .The main purpose of LoRaWAN is the energy consumption. The power consumption in idle mode for LoRaWAN is 2.8mA while in GPRS is 20mA.Hardware cost in LoRaWAN is 10doller while in GPRS is 50 dollar. Maximum data rate in LoRaWAN is 50kbps (uplink), 50 kbps downlink while in GPRS is 86.5 kbps(uplink ,14kbps(downlink).These results gives the overall efficiency of LoRaWAN in the demonstration of IOT for health monitoring system.

Mohammad M. Masud, Mohamed Adel Serhani, and Alramzana Nujum Navaz had given the measurement of ECG signals at various intervals and at different situations. They have considered energy aware, limited computing resources and lose network continuity challenges .For these challenges; mathematical model has been developed to execute each task sequentially. There are three approaches designed to work out the process

.One is mobile based monitoring approach, data mining and third is machine learning approach .

Ayush Bansal , Sunil Kumar, Anurag Bajpai, Vijay N. Tiwari, Mithun Nayak, Shankar Venkatesan, Rangavittal Narayanan focuses on development of a system which is capable of detecting critical cardiac events. Using an advanced remote monitoring system to detect symptoms which lead to fatal cardiac events .

Hamid Al-Hamadi and Ing-Ray Chen gives trust based health IOT protocol that considers risk classification, reliability trust, and loss of health probability as design dimensions for decision making. Comparative analysis of trust based protocol and baseline protocols te check feasibility.

Muthuraman Thangaraj Pichaiah Punitha Ponmalar Subramanian Anuradha." Digital hospital" term is introduced for hospital management. It enables automatic electronic medical records in standard. Also discusses with the implemented real world scenario of smart autonomous hospital management with IOT.

Table 1: Comparison of sensors and technology used [1,7,5,6,9]

Sr. No	Title of Paper	Sensors used	Technology used
1	Internet Of Things (IOT) Enabled Smart Autonomous Hospital Management System – A Real World Health Care Use Case with the Technology Drivers	Various types of sensors used	Digital Hospital
2	Remote health monitoring system for detecting cardiac disorders	12-lead ECG probe	Mobile based algorithm deployment ,Bluetooth sensor device
3	IoT-based Health Monitoring via LoRaWAN	B.P, Temp., glucose	LoRa network
4	Resource-Aware Mobile-Based Health Monitoring	ECG sensor	ECG processing analytics module

5	Internet Of Things (IOT) Enabled Smart Autonomous Hospital management System–A Real World Health Care Use Case with Technology Drivers	ECG,EKG	IoT enabled data modeling

SYSTEM AND OVERVIEW

A. Objective

• To develop health monitoring system i.e. it measures body temperature and heart rate.
• To design a system to store the patient data over a period of time using database management.
• To do analysis of collected data of sensors.

B. Block Digram

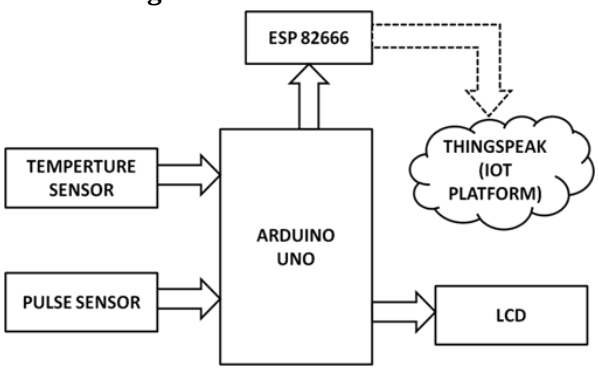

Fig 1: Block diagram of system

Fig 1 shows the proposed system .The health monitoring sensors are used to collect health related data i.e. for data acquisition. Communication can be done by controller for sending data on internet wirelessly. Data processing has been done at server. All data collected and aggregated at server point. To get health related information in understandable format it can be shown on web page i.e. data management.

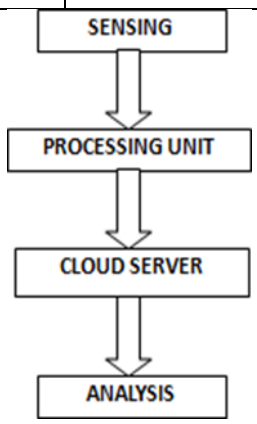

Fig 2: Working of system

Fig 2 shows the working flow of system. The results collected from sensor are analyzed i.e. if abnormal behavior has been detected , then emergency plan activated to inform the Doctor about patient's health .So it reduces critical conditions in Hospital.

C. Components Used

Table 2 gives the modules used in the system and their required specification. Following

1) Arduino uno:

Arduino uno is microntroller based on ATMega 328.Simulation is done on Arduino IDE software. The ATmega 16U2 provides serial data to the main processor and has a built-in USB peripheral. Arduino Uno power cable Standard A-B USB cable.It has 14 digital I/O pins.

2) Temperature Sensor:

LM35 sensor is used for measurement of body temperature. Sensor is put in contact with body and it senses body temperature. It is

calibrated linearly in Celsius. It has low self heating capability. Also id doesn't require external calibration.

3) Pulse Sensor:

Pulse sensor is designed to give analog output of heart beat when a finger is placed on sensor. It starts working; LED on top side will starts blinking with each heart beat. To see the sensor output, output pin of sensor is connected to controller .The working principle of sensor is based on light modulation by blood flow through nerves at each heart pulse.

Table 2: Specification of System [10]

Module	**Item**	**Specification**
Controller	Operating voltage, digital pins, Flash memory	5V, 14,32 KB
Temperatur e sensor	Temperature range, power,output impendance	-55C to 150C,4-30V,0.1Wfor 1mA load
Pulse sensor	LED, gain, Power	Infrared LED,100,3.3V
Wifi module	Power ,boud rate,range	3.3V,9600BPS, Up to 10m
LCD	Power, display	5V,plasma display

4) Wifi Module:

The ESP8266 wifi module is a self contained SOC with incorporated TCP/IP protocol stack that can offer any controller access to wifi network. It uses 802.11 b/g/n protocols. Standby power consumption is less than 0.1mW.

5) IoT Platform:

a) Use the Thinkspeak platform to send data to the cloud from any Internet-enabled device.

b) You can then configure actions and alerts based on your real-time data and unlock the value of your data through visual tools.

c) Use the Think speak offers a platform for developers that enable them to easily capture sensors data and turn it into useful information.

D) Results

Fig 3 shows the interfacing of controller to sensors & LCD.

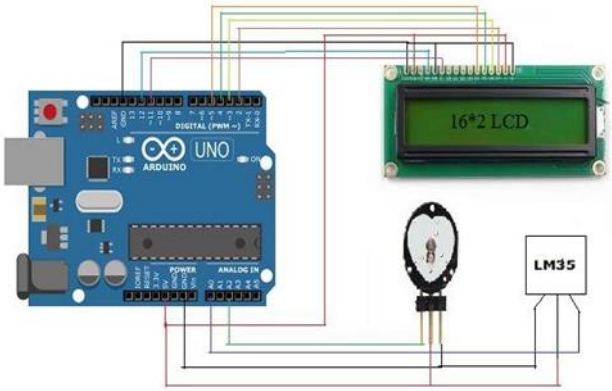

Fig 3: Interfacing of LCD and sensors with Arduino

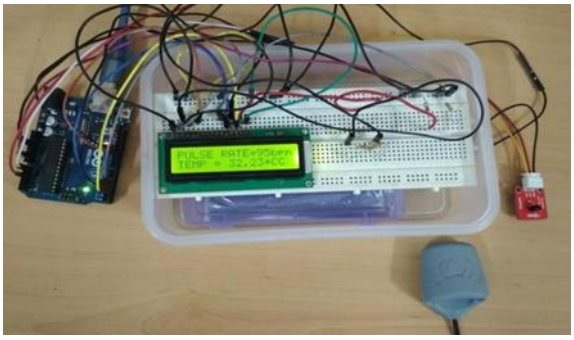

Fig 4: Setup of System

Fig 4 shows the Output on LCD of pulse sensor and temperature sensor.

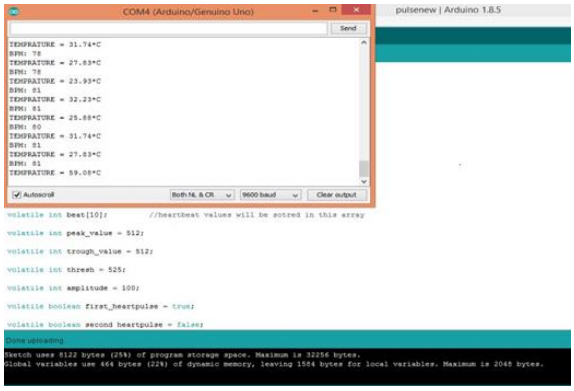

Fig 5: Simulation of system on Arduino IDE

Fig 5 is the simulation window of Arduino IDE of program.

Fig 6 gives parameters that is temperature and pulse rate is shown online on IOT platform.

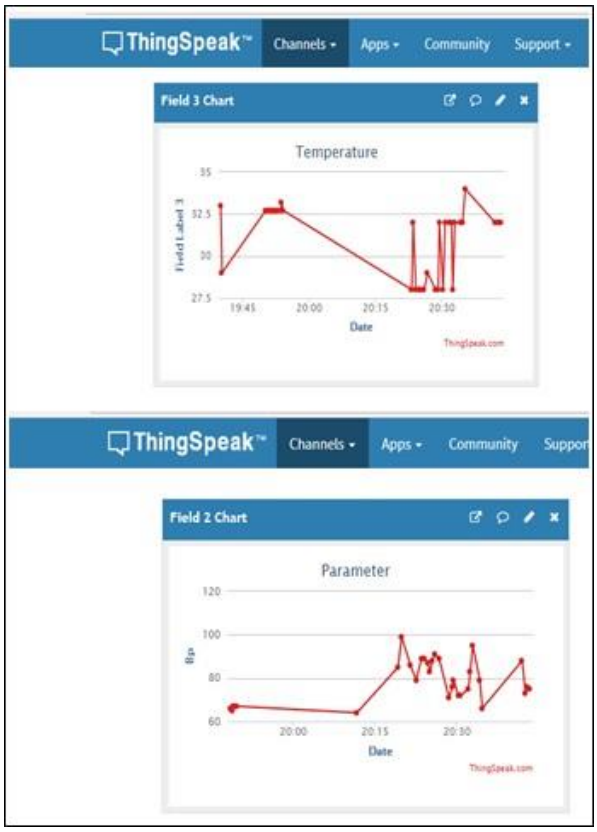

Fig 6: Graphs of sensor output

Acknowledgement

The author would like to thank to department of electronics and telecommunication for providing various test components and Dr.S.A.Pardeshi for guiding about project.

REFERENCES

1. Ebrahim Al Alkeem1, Dina Shehada1, Chan Yeob Yeun1,M. Jamal Zemerly ,Jiankun Hu "New secure healthcare system using cloud of things", Springer Science+Business Media New York 2017

2. Yena Kim, SeungSeob Lee and SuKyoung Lee "Coexistence of ZigBee-based WBAN and WiFi for Health Telemonitoring Systems" , DOI 10.1109/JBHI.2014.2387867, IEEE Journal of Biomedical and Health Informatics

3. Mirza Mansoor Baig & Hamid Gholamhosseini "Smart Health Monitoring Systems: An Overview of Design and Modeling", Springer Science+Business Media New York 2013

4. S. M. Riazul islam, Daehan kwak, MD. Humaun kabir, Mahmud hossain, and Kyung-sup kwak," The Internet of Things for Health Care:A Comprehensive Survey" , DOI 10.1109/TDSC.2015.2406699, IEEE Transactions

5. Afef Mdhaffar, Tarak Chaari , Kaouthar Larbi, Mohamed Jmaiel and Bernd Freisleben "IoT-based Health Monitoring via LoRaWAN", IEEE EUROCON 2017.

6. Mohammad M. Masud, Mohamed Adel Serhani, and Alramzana Nujum Navaz "Resource-Aware Mobile- Based Health Monitoring", 2168-2194 (c) 2015 IEEE

7. Ayush Bansal , Sunil Kumar, Anurag Bajpai, Vijay N. Tiwari, Mithun Nayak, Shankar Venkatesan, Rangavittal Narayanan, "Remote health monitoring system for detecting cardiac disorders", IET Syst. Biol., 2015, Vol. 9, Iss. 6, pp. 309–314.

8. Hamid Al-Hamadi and Ing-Ray Chen, "Trust-Based Decision Making for Health IoT Systems" DOI 10.1109/JIOT.2017.2736446, IEEE Internet of Things Journal.
9. Muthuraman Thangaraj Pichaiah Punitha Ponmalar Subramanian Anuradha, "Internet Of Things (IOT) Enabled Smart Autonomous Hospital Management System – A Real World Health Care Use Case with the Technology Drivers", 2015 IEEE International Conference on Computational Intelligence and Computing Research.
10. Maradugu Anil Kumar, Y.Ravi Sekhar, "Android Based Health Care Monitoring System" IEEE Sponsored 2nd International Conference on Innovations in Information Embedded and Communication Systems ICIIECS'1

HIGH ACCURACY LOCATION SENSING SUBSYSTEM AND WEED HOEING AGRO DEVICE USING ARDUINO

DEEPAK V [1], ELANGO V [2], MAHALAKSHMI S[3], THARUN RAJ S[4]
[1] Assistant Professor, Department of Electronics and Communication Engineering, Nandha College of Technology, Erode, Tamil Nadu, India.
[2,3,4] UG Scholar, Department of Electronics and Communication Engineering, Nandha College of Technology, Erode, Tamil Nadu, India.

Abstract - In this project, weeds are removed in a semi-structured cultivated field using Arduino microcontroller. The main objective is to cut the weeds precisely which is present near to the cultivated plant and collect it separately. A static camera is mounted for taking the images of a segment of the field. Coordinates of the weeds present in that segment is detected by IR sensors. The IR sensor uses electromagnetic radiation and thermal radiation. It consists of IR photodiode and IT LED (Light Emitting Diode). The coordinates of the weeds obtained from camera are communicated to the robot finally for cutting the weeds. This rover uses line follower technology for navigation as it is an autonomous system. It is used as a substitute for human workers to perform the weed removal process. It uses line follower technology for moving in a particular order in the crop field. This system will be monitored by smartphone through Wi-Fi module.

Keywords: Line follower, IR sensors, IR detection system, Wi-Fi module, navigation.

INTRODUCTION

Every one depends on the agricultural foods in all over the world. While using man power farmers are facing difficulties like less availability of labor and high labor cost. The farmers are looking for new technologies to overcome these difficulties. In these days, the farmers are expected to produce more yields with high quality at lower expenses that is they want to be less dependent on labor forces. The application of robots has become widespread because they are used as a substitute for human workers to perform high degree and hazardous works.

Weeds will degrade the crop if it is not removed within the short span of time hence the repetitive removal of weed produce the high yield. Weed picking by manual method is a tedious and repetitive task and automated robots can be potential candidate for this application. The products should be chemical fertilizer free as much as possible for people's care. When we use weedicide for removing weeds, the main crops will also get affected. Therefore, we have device a weed hoeing system aimed at less consumption of manual labor.

Food is one of the necessities for sustaining life of living beings. Cultivation is the plowing done after crops come up in order to control the weeds. It is also defined as production of food by preparing the land to grow crops. For weeding hand tool such as hoes were used for centuries, before equipment suitable for being pulled by draft animals was developed.

Weed is defined as a plant out of place and not intentionally sown. Weed is the plant grown where it is not wanted. They are competitive, persistent and pernicious and interfere negatively with human activity.

Weeds are troublesome in many ways primarily, they reduce crop yield by competing for water, light, soil, nutrients and space. It also reduces crop quality by contaminating the commodity. Weeds serve as hosts for crop disease or provide shelter for insects to over winter. It will limit the choice of crop rotation sequences and cultural practices. It enhances the production of chemical substances which are toxic to crop plants.

To overcome these problems due to weeds stated above and to improve the existing system, we have designed a ROBOT USING ARDUINO TO DETECT AND REMOVE WEEDS. With this method farmers can identify the weeds and thus remove them for increasing the yield. This method will save time of farmers and manpower in field.

Existing system

The existing system is for hoeing the weeds in the field. The module consists of six wheeled rover and above which it is an embedded module. The web camera is fit on the module which is used to capture the image of the field when the robot moves.

The captured images are compared with the main crop image which is stored in that device. After the comparison made, the rover will know that whether it is a weed or not. If it is weed, the rover will plug the weed. These cutting instructions are given by manual mode through the mobile application which is linked to the rover. This manual method is not suitable for all the situations. To overcome this problem we proposed the automation weed detection and removing system.

Proposed system

Both main crops and weeds (unwanted crops) are grown in the crop field. The weeds are the barriers for the growth of the main crop. The weedicides or herbicides are used to kill the weeds. These chemicals reduce the growth and quality of the main crop that leads to affects the people's health. To avoid this we proposed the automated rover for removing the weeds from the crop field. That is this rover will automatically detect the weed and remove it from the crop field. It uses line follower technology for navigation around the crop field.

Methodology

The rover is first placed in the crop field and gets started to move by the line follower technology and find the weed. The line follower technology is a technology which follows a certain path which is controlled by a feedback mechanism. The weeds are identified and located by the sensors. Then the arm gripper will point the weed, moves towards to it and then plug it. As the arm gripper is able to rotate about 180°, it will plug the weed present in 180° area around it.

The spinning blade is also attached under the rover to cut the weed. That blade is connected to the high speed DC motor in which the height of the blade is adjustable for weed's height. The dimension of the crop field will be injected to the rover and so it will not move to the other fields as the rover is automated.

The camera will be mounted on the rover. It is used to capture the video while the rover is working in the crop field to monitor that whether the rover will do the work properly by using mobile itself through Wi-Fi module. The block diagram of the rover is given below.

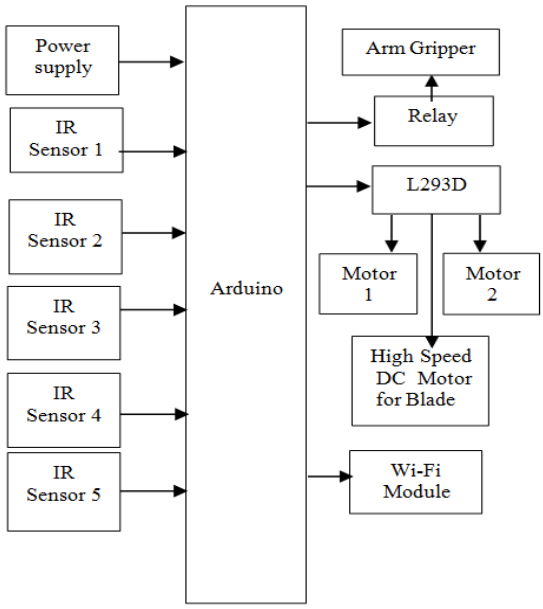

Fig: Block diagram

Hardware and Software Power supply:

Available power source is an Ac voltage arrives at 230 V. The electronic circuits require only minimal voltage and current. So we use step down power transformer. Step down transformer is designed in such a way that the input is 230 V and output of 12 V. Another thing is that electronic circuits operate in DC whereas available output of transformer is Ac of 12

V. So rectifier circuit is used to convert AC to DC. Rectifier circuit consists of four diodes formed in bridge fashion to convert incoming AC to DC.

Transformer:

Fig: Transformer

It is a device used to transfer the electrical energy from one circuit to another circuit through inductively coupled conductors, the transformer's coils or windings. It is used to step down the supply voltage to a level suitable for the low voltage components. It is a 230/(12V-0- 12V) step down transformer.

Even though rectifier circuit output is DC, it is rippling DC or not fixed or smooth DC. So the filter circuits are used to convert that rippling DC to smooth DC. The filter circuit is a capacitor which is connected parallel to the output of rectifier circuit. This smooth DC voltage will be +12 volts. But we require only 5 V supply for the operation of microcontrollers and its supporting components. Here regulator

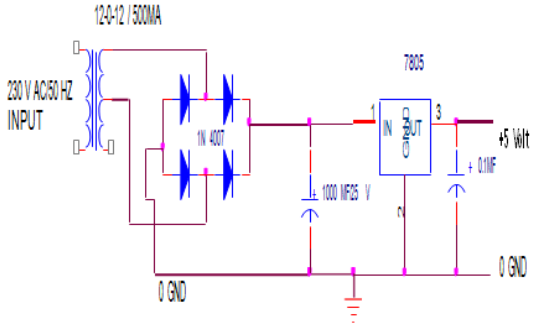

Fig: Circuit diagram of power supply

IC7805 is used to regulate the incoming

12VDC to fixed regulated 5 V as output. This DC regulated 5 V is applied to the circuits.

Even though the circuit is functioning with 5 V, the relays are driven by 6 V or 12 V. For this purpose 7806/7812 regulator IC is additionally connected to the rectifier filter circuit. Thus, 12 V regulated is used for driving 12 V relays.

Regulator:

Fig: Regulator section

For most number of critical applications the best choice for a voltage regulator is the simple terminal type. It has only three connections (input, output, and ground) and is factory-trimmed to provide a fixed output. Typical of this type is the 78XX. The voltage is specified by the last two digits of the part number and can be any of the following: 05, 08, 10, 12, 15, 18, or
24. It is to make a +5 volt regulator, for instance, with one of these regulators. The capacitor across the output improves transient response and keeps the impedance low at high frequencies (an input capacitor of at least 0.33 F should be used in addition if the regulator is located a considerable distance from the filter capacitors).

The 7800 series is available in plastic or metal power packages (same as power transistors). A low-power version, the 78LXX, comes in the same plastic and metal packages as small-signal transistors. The

7900 series of negative regulators works the same way (with negative input voltage, of course). The 7800 series can provide up to 1 amp load current and has on-chip circuitry to prevent damage in the event of overheating or excessive load current; the chip simply shuts down, rather than blowing out.

Transistor safe operating area is by reducing available output current for large input to output voltage differential. These regulators are in-expensive and easy to use, and they make it practical to design a system with many printed-circuit boards in which the unregulated dc is brought to each board and regulation is done locally on each circuit card.

LM78XX Series Voltage Regulators:
The LM78XX series of three terminal regulators is available with several fixed output voltages making them useful in a wide range of applications. One of these is local on card regulation, eliminating the distribution problems associated with single point regulation. The voltages available allow these regulators to be used in logic systems, instrumentation, Hi-Fi, and other solid-state electronic equipment.

Although designed primarily as fixed voltage regulators, these devices can be used with external components to obtain adjustable voltages and currents.

The LM78XX series is available in an aluminium TO-3 package which will allow over 1.0 Amps load current if adequate heat sinking is provided. Current limiting is included to limit the peak output current to a safe value. Safe area protection for the output transistor is provided to limit internal power dissipation. If internal power dissipation becomes too high for the heat sinking provided, the thermal shutdown

circuit takes over preventing the IC from overheating.

Considerable effort was expanded to make the LM78XX series of regulators easy to use and minimize the number of external components.

It is not necessary to bypass the output, although this does improve transient response. Input by-passing is needed only if the regulator is located far from the filter capacitor of the power supply.

Voltage Range

- LM7805C 5 V
- LM7812C 12 V
- LM7815C 15 V
- LM7912C -12 V

DC Motor:

In any electric motor, operation is based on simple electromagnetism. A current carrying conductor generates a magnetic field when this is then placed in an external magnetic field.

A DC Motor is a machine which converts electrical energy into mechanical energy. Its location is based on the principal that when a current carrying conductor is placed in the magnetic field, it experiences a mechanical force whose direction is given by Fleming's left-hand rule.

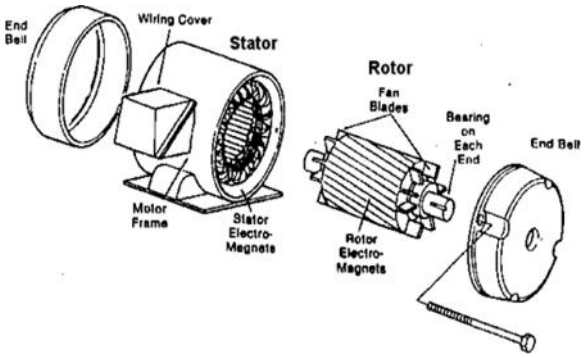

Fig: DC Motor

Arduino UNO:

The Arduino Uno is a microcontroller board based on the AT mega-328. It has 14 digital input/output pins (of which 6 can be used as PWM outputs), 6 analog inputs, a 16 MHz ceramic resonator, a USB connection, a power jack, an ICSP header, and a reset button. It contains everything needed to support the microcontroller; simply connect it to a computer with a USB cable or power it with an AC-to-DC adapter or battery to get started.

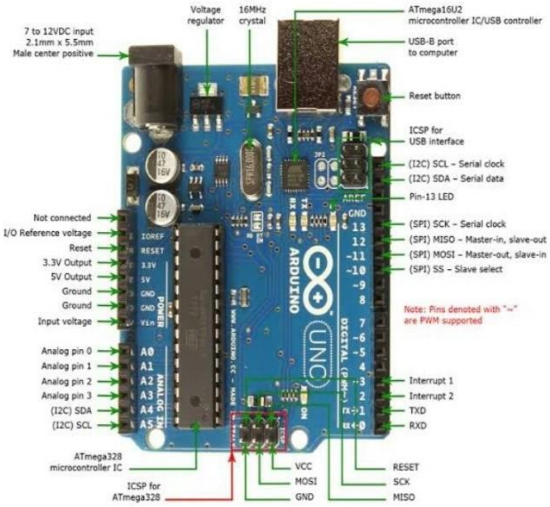

Fig: Arduino UNO

Microcontroller	AT mega-328
Operating Voltage	5 V
Recommended Input Voltage	7-12 V
Input Voltage limits	6-20 V
Digital I/O Pins	14 (out of which 6 pins provide PWM output)
Analog Input Pins	6
DC Current per I/O Pin	40 Ma
DC Current for 3.3 V Pin	50 Ma
Flash Memory	32 KB (out of which 0.5 KB is used by bootloader
SRAM	2 KB
EEPROM	1 KB
Clock Speed	16 MHz

L293D Motor Driver:

L293D is a Motor Driver IC which allows DC motor to drive on both directions. It is a 16 pin IC that can control a set of 4 motors simultaneously in all direction (with a single L293D IC).

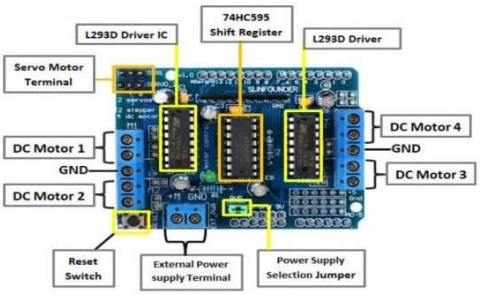

Fig: L293D Motor Driver

IR Sensor:

This is a remote control which consists of LED to produce a special IR light beams. IR beams are special form of light which has a wavelength of the visible light. This makes the transmitted signal invisible to the naked human eye, but an IR photodiode or photo transistor can sense this signal. The IR light wavelength is 7×10-7.

Relays:

Relays are electrically controlled switches. Normally in relays, a coil pulls in an armature when sufficient coil current flows. Numerous varieties are available including latching and stepping relays. A notable property of relays is that the circuit powering the coil is totally separate from the circuit switched on the relay. Due to this property, relays are used where a safe low voltage circuit controls a high voltage circuit.

Wi-Fi Module:

The ESP8266 Wi-Fi module is a self-contained SOC with integrated TCP/IP protocol stack that can give any microcontroller access to your Wi-Fi network. It is capable of either hosting an application or offloading all Wi-Fi networking functions from another application processor.

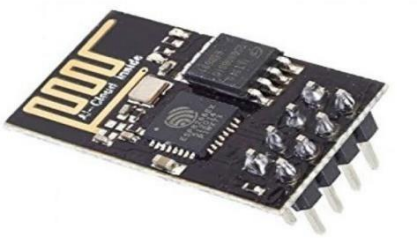

Fig: Wi-Fi module

Conclusion

This paper is an idea of Automated Agro Rover which is navigated through the cultivated field for weed detection and removal operation. The great advantage of this proposed method is that gardeners can enjoy weed-free and chemical-free gardens. It focuses on reducing farming cost as well as increasing crop production in less time. The main advantage is the farmer does not have to keep on finding weeds in a large field instead the robot gets the location of each weed sequentially and it is able to remove the weed using gripper mechanism. This is helpful to save money, labor, physical efforts for economical cultivation and lots of time to the farmers, and they can focus on other agricultural requirements for the growth of crops.

Future work

The proposed system can be modified for future application. In advancement of weed detection and removing process, some arrangements can be made to avoid mud stuck in between the teeth/blades, tires and wheels and made all weatherproof fittings for suitable to all weather conditions. There is need to be made to have inbuilt adjustability to change the width of working of the rover. Further development of the technology may make it possible for a robot with similar technology to weed any field in agriculture.

Reference

[1] A° strand. B and Baerveldt. A. -J, "A vision based row-following system for agricultural field machinery," Mechatronics, vol. 15, no. 2, pp. 251–269, Mar. 2005.

[2] Bakker. T et al., "A vision based row detection system for sugar beet," Comput. Electron. Agriculture, vol. 60, no. 1, pp. 87–95, Jan. 2008.

[3] DeSouza. G. N and Kak. A. C, "Vision for mobile robot navigation: A survey", IEEE Trans. Pattern Anal. Mach. Intell., vol. 24, no. 2, pp. 237–267, Feb. 2002.

[4] English. A, Ross. P, Ball. D, and Corke. P, "Vision based guidance for robot navigation in agriculture," in Proc. IEEE Int. Conf. Robot. Autom., 2014, pp. 1693– 1698.

[5] Graefe. V and Kuhnert. K, "Vision-based autonomous road vehicles," in Vision-Based Veh. Guidance, I. Masaki, Ed., Berlin, Germany: Springer-Verlag, 1992, pp. 1–29.

[6] Marchant. J. A, and Brivot. R, "Real-time tracking of plant rows using a Hough transform," Real-Time Image, vol. 1, no. 5, pp. 363–371, Nov. 1995.

[7] Marchant. J. A, "Tracking of row structure in three crops using image analysis," Comput. Electron. Agriculture, vol. 15, no. 2, pp. 161–179,Jul. 1996.

[8] Mc Bratney. A. B, Whelan. B, and Ancev. T, "Future directions of precision agriculture," Precis. Agriculture, vol. 6, pp. 7–23, 2005.

[9] Olsen. H. J, "Determination of row position in small-grain crops by analysis of video images", Comput. Electron. Agriculture, vol. 12, no. 2, pp. 147–162, Mar. 1995.

[10] Tillett. N. D, Hague. T, and Miles. S. J, "Inter-row vision guidance for mechanical weed control in sugar beet," Comput. Electron. Agriculture, vol. 33, no. 3, pp. 163–177, Mar. 2002.

[11] Turk. M. A, Morgenthaler. D. G, Gremban. K. D, and Marra. M, "VITS–A vision system for autonomous land vehicle navigation," IEEE Trans. Pattern Anal. Mach. Intell., vol. 10, no. 3, pp. 342–361, May 1988.

[12] Wang. Y, Teoh. E, and Shen. D, "Lane detection and tracking using B-Snake," Image Vis. Comput., vol. 22, no. 4, pp. 269–280, Apr. 2004.

Investigation of Various Personalized Human Activities for Health Monitoring By Deep Learning AND IoT

P.Vinoth kumar[1], J.J.Deepika[2], A.Hari narayanan[3], V.Kavin[4], P.Kavipriya [5]
[1] Associate professor, Department of Electronics and Communication Engineering, Nandha college of Technology.
[2,3,4,5] UG scholar, Electronics and Communication Engineering, Nandha college of Technology. 3 UG scholar, Electronics and Communication Engineering, Nandha college of Technology.

Abstract - The digitalizing world simplifies our everyday processes with the help of an exclusive technology of IoT. Our proposed work removes the need for allotting a separate slot for the observation of human activities by the automatic monitoring of daily activities and clinical variations of human .An innovative Human Activity Recognition system, exploiting the potential of wearable devices integrated with the skills of deep learning techniques is presented with the aim of recognizing the most common daily activities of a person at home. It is basically a wearable device which easily identifies the variation of parameter in human body of elderly care and medical diagnosing people. The status of a person is regularly observed and can be monitored. The designed wearable sensor embeds with an Accelerometer, Gyroscope and a Magnetometer which is conceived for daily activity monitor and a Wi-Fi section to send data on a cloud service. Through this nine different activities can be highlighted with a great accuracy. Which helps to monitor the people at home from any where.

Keywords: Gyroscope, Wearable device, Accelerometer, Magnetometer, Internet of Things (IoT), Machine learning, Activity recognition.

INTRODUCTION

The wearable sensors have gained considerable importance both in research and application fields. The reason for such interestlies in their use in many applications which has been made possible by progressive reduction of their size and cost.

The accelerometer used to measure the acceleration exerted upon the sensor, the Gyroscope sensor is a device that can measure and maintain the orientation and the magnetometer is used for high accuracy.

A behavioural model can be constructed also with environmental sensors, but aging at home makes it possible to have the presence of two or more elderly people in same environment each with its own disease that must be monitored in a personalized manner.

The purpose of this paper is a real time activity recognition and a long time personalized monitoring the activity performed during the day by the elderly to infer abnormal behaviours, often relevant to unhealthy states or emergent situations.

LITERATURE REVIEW

In[1] the authors have discussed about the different types of smart wearables through machine learning technology which were helpful in the monitoring of health state of a human.

In[2] Developing of monitoring the daily fitness activity using an accelerometer sensor which is mounted on a wearable devices such

as smart phones, smart watches, and wristband which recognize the human activity.

In[3] the focus is to develop a wearable Inertial sensor that is used in detecting the athlete's joint angular motion and impact accelerations.

METHODOLOGY:

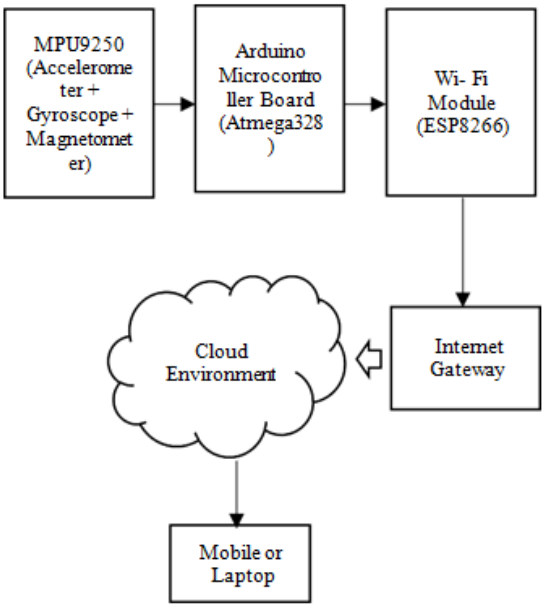

Fig 1: BLOCK DIAGRAM

Sitting, walking, jump, sit down, stand, running, climbing stairs up, climbing stairs down, stay seated are the nine parameters to identifying human activities. These are the nine parameters were tracked by using MPU. Here we use Accelerometer, Magnetometer and Gyroscope were used for tracking the conditions. Based on the conditions from the accelerometer and gyroscope readings these were stored as a data on the cloud and these were obtained for every 15 seconds. We use Convolutional Neural Network to avoid false readings.

MPU9250 SENSOR:

Fig 2: MPU9250 SENSOR

The human activity can be measured by using an accelerometer sensor, gyro sensor and magnetometer sensor. These three sensors are used to get the accurate activity of a person when we using together. All three can be found in a single unit in the MPU9250 Sensor module.

ACCELEROMETER:

Usually, the acceleration is given in two or three axis-vector components (XYZ) that make up the sum/net acceleration. The activity and movement of a person can be identified through the accelerometer. In our work we are taking the activities of a person like walking, standing, sitting-down, stay seated, standing-up, lie down are accurately measured through the accelerometer unit.

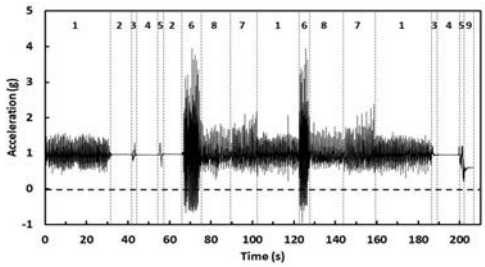

Fig 3: Accelerometer reading

GYROSCOPE:

Gyroscope are more advanced than accelerometers. These can measure the tilt and lateral orientation of the object whereas the accelerometer can only measure the linear motion. To get accuracy in human activity and

enhancing the results we using Gyroscope.

MAGNETOMETER:
Magnetometer is also used to detect human activity. To increase the accuracy we added magnetometer value in our work.

ARDUINO MICROCONTROLLER:

Fig4: ARDUINO MICROCONTROLLER

The Arduino microcontroller board contains an Atmega328 microcontroller. It consists of 14 digital pins and 6 analog pins for input/output operations. The sensor module is connected directly with Arduino UNO. It measures the sensor readings and categorizes the person activity. These activities further uploaded in the cloud. This module controls the entire system.

ESP8266 Wi-Fi MODULE:

Fig 5: ESP8266 Wi-Fi MODULE

To upload the sensor data in a cloud environment we required and wired/wireless communication module. This module allows microcontrollers to connect to a Wi-Fi network and make simple TCP/IP connections with simple commends.
Since we are focusing on the wearable device, we targeting wireless communication module. The ESP8266 Wi-Fi unit is more suitable for efficient communication compares to other wireless protocols with less price. It receives the sensor value through Arduino UNO and helps to upload to the cloud.

INTERNET GATEWAY:

It gives connectivity support to the internet and acts as an intercommunication module to connect Wi-Fi and Cloud.

CLOUD ENVIRONMENT:

All the collected sensor data will be gathered in Cloud Environment. The received useful sensor data is collected every 15 secs. From that data we can find human activities like walking, standing, sitting-down, stay seated, standing-up, lie down etc. In this work, we using Thing Speak Open source cloud for collecting and analysing the activities.

In this work we added a Deep Learning technique, Convolutional Neural Network to predict the activity very accurately. The collected sensor data from the cloud is used to create a database. From the database, we can analyze human activity by training CNN.

RESULT:

The different readings for the different activities can be obtained and stored in the cloud.

Fig 6. Example of sampling in fixed-width sliding windows of 2.56s.

Fig 7. The final architecture of the trained CNN.

Fig. 8. The final grid-search with the best configuration

Fig. 9. Comparison between different architectures reported in literature using datasets acquired in an AAL Environment.

CONCLUSION:

In this project, IoT system is used for monitoring various personalized human activities performed by a person at home. This is mainly used for old-aged people who are having health issues. Deep learning is a type of artificial intelligences which is used to recognize a human parameters. Deep learning and IoT system are performed by MPU9250 which contains accelerometer, gyroscope and magnetometer. Instead of using Launchpad these sensors are used to

measure the human parameters accurately. These three sensors analyze human activities like sitting, walking, jump, sit down, standing, running, climbing stairs up, climbing stairs down, and stay seated. These analyze data transferred to an Arduino microcontroller which are converted into anolog or digital. Then the data transferred from Arduino to Wi-Fi module to store the data in cloud service. To store the data in cloud the internet gateway is used as a pathway for cloud. From the cloud we can monitor the human activities through mobile or laptops. We can access the cloud storage in remote areas.

FUTURE SCOPE:

Measurement of activities can be maximized (other than the nine).

Using of advanced systems which results in reduction of cost.

Encoders used can be of more resolution and precision so that they can be used to make the system more precise.

REFERENCES:

[1] Ahmadi.A et al., “Toward Automatic Activity Classification and Movement Assessment during a Sports Training Session,” IEEE Internet Things J., vol. 2, no. 1, Feb. 2015.

[2] Ancans.A, A. Rozentals, K. Nesenbergs, and M. Greitans, “Inertial sensors and muscle electrical signals in human-computer interaction,” in 2017 6th International Conference on Information and Communication Technology and Accessibility (ICTA), 2017.

[3] Bianchi.V,P. Ciampolini, and I. De Munari, “RSSI-Based Indoor Localization and Identification for ZigBee Wireless Sensor Networks in Smart Homes,” IEEE Trans. Instrum. Meas., vol. 68, no. 2, 2019.

[4] Bisio.I, A. Delfino, F. Lavagetto, and A. Sciarrone, “Enabling IoT for In-Home Rehabilitation: Accelerometer Signals Classification Methods for Activity and Movement Recognition,” IEEE Internet Things J., 2016.

[5] Bianchi.V, C. Guerra, M. Bassoli, I. De Munari, and P. Ciampolini, "The HELICOPTER project: Wireless sensor network for multi-user behavioral monitoring," in 2017 International Conference on Engineering, Technology and Innovation: Engineering, Technology, and Innovation Management Beyond 2020: New Challenges, New Approaches, ICE/ITMC 2017-Proceedings, 2018, vol. 2018-Janua.

[6] Fonseca.C, D. Mendes, M. Lopes, A. Romao, and P. Parreira, “Deep Learning and IoT to Assist Multimorbidity Home Based

Healthcare," J. Heal. Med. Informatics, vol. 08, no. 03, Jun-2017.

[7] Guerra.C, V. Bianchi, I. De Munari, and P. Ciampolini, "CARDEAGate: Low-cost, ZigBee-based localization, and identification for AAL purposes," in Conference Record -IEEE Instrumentation and Measurement Technology Conference, 2015, vol. 2015-July

[8] Mora.N , V. Bianchi, I. De Munari, and P. Ciampolini, "A low-cost brain-computer interface platform for AAL applications," Assist. Technol. Res. Ser., vol. 33,2013.

[9] Montalto.F, C. Guerra, V. Bianchi, I. De Munari, and P. Ciampolini, "MuSA: Wearable multi-sensor assistant for human activity recognition and indoor localization," Biosyst. Biorobotics, vol. 11, 2015.

[10] Malwade.S et al., "Mobile and wearable technologies in healthcare for the aging population," Computer. Method Programs Biomed, vol. 161, 2018.

[11] Mukhopadhyay.S.C, "Wearable Sensors for Human Activity Monitoring: A Review," IEEE Sens. J., vol. 15, no. 3, Mar. 2015.

[12] Qiu.H, X. Wang, and F. Xie, "A Survey on Smart Wearables in the Application of Fitness," in Proceedings-2017 IEEE 15th International Conference on Dependable, Autonomic and Secure Computing, 2017 IEEE 15th International Conference on Pervasive Intelligence and Computing, 2017 IEEE 3rd International Conference on Big Data Intelligence and Computer, 2018, vol. 2018-Janua.

[13] Qiu.S, Z. Wang, H. Zhao, L. Liu, and Y. Jiang, "Using Body-Worn Sensors for Preliminary Rehabilitation Assessment in Stroke Victims With Gait Impairment," IEEE Access, vol. 6, 2018.

[14] Zainudin.M.N.S, M. N. Sulaiman, N. Mustapha, and T. Perumal, "Monitoring daily fitness activity using accelerometer sensor fusion," in 2017 IEEE International Symposium on Consumer Electronics (ISCE), 2017.

[15] "World Population Prospects: The 2017 Revision | Multimedia Library - United Nations Department of Economic and Social Affairs."

Investigation on Autonomous Solar Tracker and Maintenance System Using IoT and Cloud

[1]Keerthana.R, [2]Geethanjali T, [3]Santhoss M R, [4]Sharmila M, [5]Vishaga G

[1]Assistant professor/Department of ECE Nandha College of Technology Erode, India
[2,3,4,5] Department of ECE Nandha College of Technology Erode, India
Email: [2]geethanjalithyagaraj @gmail.com, [3]mrsanthoss@gmail.co m, [4]sharmilamoorthy327 @gmail.com, [5]vishagagovind@gmai l.com

Abstract - The monitoring of solar power plant is needed to obtain optimum output power. This efficient output power plants while monitoring for connections, accumulation of dust or any other fault in solar panels affects the solar performance by lowering by output IOT based solar power monitoring system allows solar monitoring over the cloud and check whether there is a problem in solar panel connection by lowering output to find the problem occurs in solar panel. The AT mega controller used to monitor the parameters in solar panel. They monitor the solar panel and transmit the output to the IOT Thingspeak transmits the solar power parameters in the Thingspeak server. The parameters is displayed by using GUI and when the output falls below the specific limit it alerts the user, there is a problem in solar panel connections or any dust particles on the solar panel. This makes the monitoring of solar panel easier and ensure best power.

Keywords- Photovoltaic cells, IoT monitoring, cloud. Electricity

INTRODUCTION

Nowadays the energy deficiency problems faced by the world, more especially the third world countries are urging researches to find an alternative energy source that would complement the conventional fossil fuel. Solar energy is taken from sun in tha from of heat light the. This energy is essential for life on earth .It is a renewable resources that is clean, economical and less pollution compared to other resources and energy. Solar energy is the energy generated by harnessing the power of the solar radiation. Solar panel which capture the sunlight stationary (solar energy has a fixed orientation to the sky).solar power plants need to be monitored for optimum power output. The power output of solar panels are unable to extract the maximum when it's oriented perpendicular to the direction of the sun rays as both the area of illumination of sunlight on solar panel and intensity of sunrays is maximum in this case. This retrieve efficient power output from power plants, while monitoring faulty of PV cells connection s and dust accumulated on cells lowering output and other such issues affecting solar performance. Solar

we propose an automated IOT based solar power monitoring from anywhere over this internet .we can use Arduino parameter. Because Arduino boards are relatively inexpensive compared to other microcontroller. The Arduino is based atmel's ATMEGA8 and ATMEGA168 microcontrollers. Our system constantly monitors the PV cells transmits the power output to IoT system over the internet. Then we use IOT to transmit solar power parameters over internet through cloud .cloud computing is the delivery of computing services-databases, software, networking and storage. Finally display these parameters to the user

using effective GUI (geographical User Interface).It example of web browser and alters user when the output falls below specific limits. This makes investigation of solar plant very easy and energy best power.

LITERATURE REVIEW

S.No	Reference Paper	Authors
1	Data Security Approach in IoT Environment 10th International Conference on Computing, Communication and Networking Technologies (ICCCNT), 2019, pp	Shrut i Sawardekar, Renuka Pawar,
2	Automation of solar panel assessment system 2nd Internat ional Conference on Communication and Electronics Systems (ICCES), 2017	Sushrut Nagesh Kulkarni , Mait hilee Nagesh Kulkarni
3	Implementat ion of WiFi-based single phase smart meter for Internet of Things (IoT)", Internat ional Elect rical Engineering Congress (iEECON) , 2017.	Win Hlaing, Somchai Thepphaeng, Varunyou Nontaboot
4	Design and implementation of Modbus protocol for int elligent building Securit y", IEEE 19th Internat ional Conference on Communicat ion Technology, 2019	Wenzhu You, Haibo Ge,

System Design

The proposed system is for monitoring sun energy using IOT solar panel helps to store the energy in the battery. Battery has the energy which is useful for electrical appliances. There are four sensors voltage, current, dust and intensity sensor which are connected with Arduino as well as bread board. Arduino microcontroller can be used to read the sensor values.

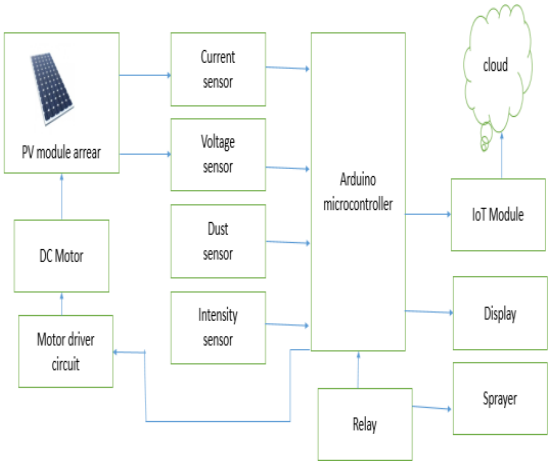

Fig-1 Block diagram

Methodology

In this section we present the system design of the solar energy monitoring system Natural of the solar tracking a maintenance system. A microcontroller based design methodology of an automatic solar tracker is developing the overall system, hardware and software portions of the project. PV cellar tracker adjust the direction that PV panel is facing according to the position of the sun in the sky. By keep the panel perpendicular to the sun ,more sunlight strikes the solar panel, less light is reflected and more energy is absorbed .That energy can be converted in to power.

Arduino

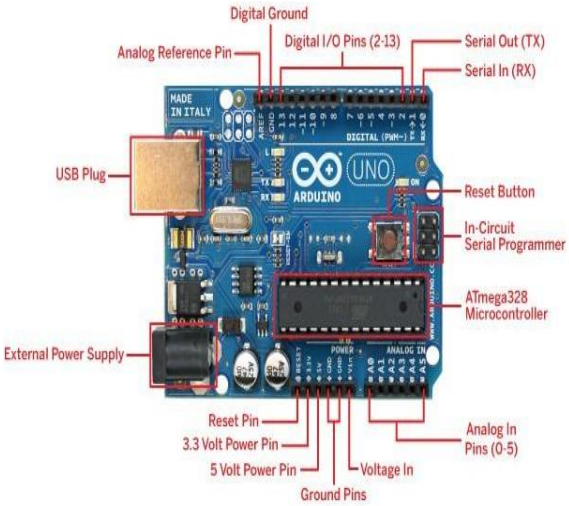

Fig-2

Arduino has been used which abates the programming complexity. Arduino Projects can be stand alone or they can communicate with software running on your computer (e.g. flash, processing Max MSP).Open source physical computing platform based on a simple microcontroller board.

Voltage and current sensors

This sensor is used to monitor, calculate and determine the AC or DC voltage level. The input of this switches analog voltage signal, a current signal an audible signal etc. The

estimation of these sensors can depend on the voltage separator. A current is a device that detects electrical current in a wire and generates a signal proportional to it. It can be then utilized to display the measured current in an ammeter or can be stored further analysis in a data acquisition system or sensed can be utilized for control purpose. The sensed current and output signal can be 1)AC current input 2)DC current input.

Indensity sensor

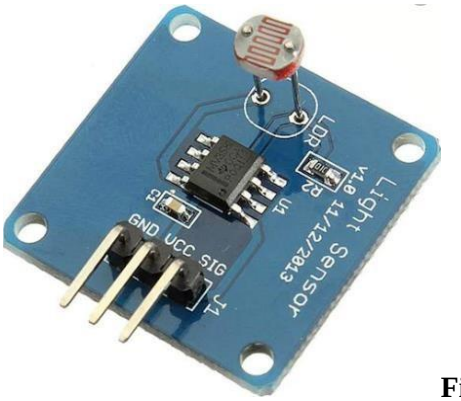

Fig-3

The light sensor is a passive device that converts this "light energy "whether visible or in the infra-red parts of the spectrum into the an electrical signal output. Light sensors are more commonly known as "photoelectric Devices " or "photo sensor "because the convert the light energy into electricity.

IOT Module

"IOT is a network of physical objects with embedded electronics that collect and share data". The evaluation of current and voltage are checked and sent to the IOT module, at that point the IOT module stores the current also ,voltage analyze with data and time. IOT devices share the sensor data they collect by connecting to an IOT gateways or other edge device. These devices communicate with other related devices and act on the information they get from one another. It is a increasing time effective than existing strategies for remote checking structure for photoelectric solar cell. The work incorporates remote checking structure intended to photoelectric solar cell. This module is utilized for remote checking the photoelectric solar cell. The current and voltage evaluation of PV are estimated with the assistance of current and voltage sensor. These yields are in simple information compose, so it changed over into computerized shape utilizing analog to advanced converter. The estimated information are given to the MCU. The microcontroller sends the deliberate information to the IOT. The internet of things is the system of physical appliance which empowers these modules to associate and trade information. The fundamental reason for this undertaking is to screen the PV and putting away the information in the container. Along this lines from, this venture, we can productively screen the photograph voltage boards remotely and put away the deliberate information. The microcontroller unit reports are shared to the IOT.

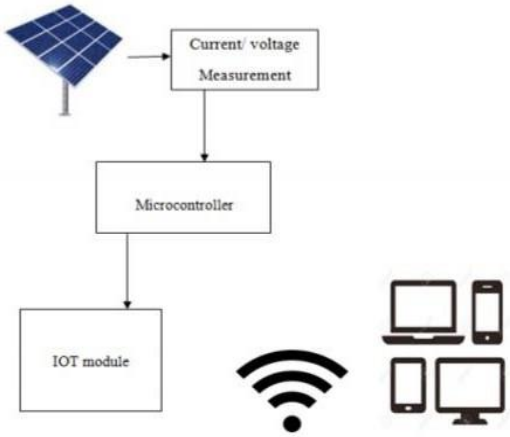

Fig-4

Structure Panel monitoring using IOT module

The connectivity networking and communication eagerly depend on the specific IOT application deployed

Cloud setup

Cloud can offer the possibility of storing data about the day to day power consumption. Thingspeak is an open source IOT application and API to store and retrieve data from things using local area network or internet. Thing speak enables the creation of sensor logging applications, location tracking applications and a social network of things with status updates. The cloud has built in functions in it which represent the values in form of graphs. Multiple post operations are performed on data over cloud and mobile application also access the data from cloud.

IMPLEMENTATION

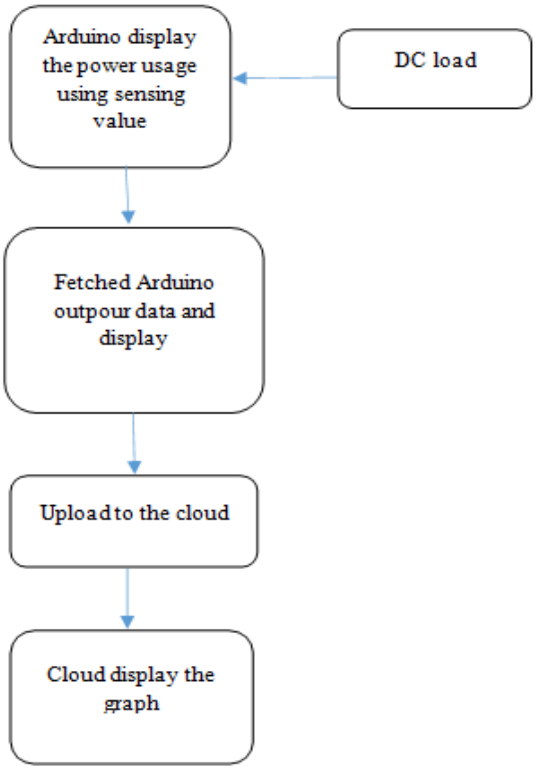

Fig-5

Work Flow

Fig 5. Represents the process of proposed system from load to the monitoring system. The work flow of the solar energy monitoring system is presented in the form of step below.

Step 1: Arduino show the capacity usage using sensed Values through current sensor and voltage divider.

Step 2: Fetch the Arduino output data through Serial port and display.

Step 3: Arduino sends the monitoring data on to the Cloud.

Hardware Setup

Fig-6

Fig 6 shows the Hardware framework our project system. The solar power saved in battery by PV is DC current. One terminal of the bulb is connected to the battery for power supply. Other terminal is connecting to the current sensor for current reading. Breadboard is used for the complex circuit to build. It also helps to build voltage divider.

RESULT

The result of the system is displayed on in the form of current in ambers, voltage in volts, power in watts and energy in watt-hours with respect to data and time. The monitoring data send to the cloud is store in separate fields

Each field display the inviduval graph as shown figure no 7

Fig 9 Monitoring Page in Intranet

Fig 10. Current, Voltage, power Energy Graphs

Fig-7

CONCLUSION

The need of electricity is rising day by day and traditional sources of energy are not producing enough to meet this graph. This exponential need also effects on electricity cost and human lives. Internet of things revolutionizing human lives in every field of life. Solar panel are not traditional source of electricity that may fulfil the need of energy. In this paper, an IOT based approach for monitoring the solar power consumption is presented and a prototype is developed to simulate the results.

FUTURE WORK

Fabrication of Microcontroller using ASIC concepts: The number of wires can be greatly reduced by directly if a customized PCB is made upon which all the resistors can be directly soldered. This also eliminates the use of a Breadboard which was used to make all the external connections.

Design Improvements: With the current design, it can be seen that the controller circuit rotates along with the panel. This was done to avoid tangling of wires. A ainch,better design may be realized in which only the panel rotates and all other parts are stationery mounting of the Panels: In our design the panels are mounted on a horizontal shaft supported strongly at both ends. We can mount the panels directly onto a motor placed at the center of the Panel-Base in order to provide East-West movement. This reduces the weight and effective cost of the project.

REFERENCES:

[1] M. Giordani, M. Polese, M. Mezzavilla, S. Rangan, and M. Zorzi, “Toward 6G networks: Use cases and technologies,” IEEE Commun. Mag., vol. 58, no. 3, pp. 55–61, Mar. 2020.

[2] H. Viswanathan and P. E. Mogensen, “Communications in the 6G era,” IEEE Access, vol. 8, pp. 57063–57074, 2020.

[3] E. C. Strinati et al., “6G: The next frontier: From holographic mes- saging to artificial intelligence using subterahertz and visible light communication,” IEEE Veh. Technol. Mag., vol. 14, no. 3, pp. 42–50, Sep. 2019.

[4] W. Saad, M. Bennis, and M. Chen, “A vision of 6G wireless systems: Applications, trends, technologies, and open research problems,” IEEE Netw., vol. 34, no. 3, pp. 134–142, May/Jun. 2020.

[5] X. Shen et al., “AI-assisted network-slicing based next-generation wireless networks,” IEEE Open J. Veh. Technol., vol. 1, pp. 45–66, Jan. 2020.

[6] E. Yaacoub and M. Alouini, “A key 6G challenge and opportunity—Connecting the base of the pyramid: A survey on rural connectivity,” Proc.

IEEE, vol. 108, no. 4, pp. 533–582, Apr. 2020.

[7] B. Mao, Y. Kawamoto, and N. Kato, "AI-based joint optimization of QoS and security for 6G energy harvesting Internet of Things," IEEE Internet Things J., early access, Mar. 23, 2020, doi: 10.1109/JIOT.2020.2982417.

[8] M. S. Sim, Y. Lim, S. H. Park, L. Dai, and C. Chae, "Deep learning-based mmWave beam selection for 5G NR/6G with sub- 6 GHz channel information: Algorithms and prototype validation," IEEE Access, vol. 8, pp. 51634–51646, 2020.

[9] F. Tang, Y. Kawamoto, N. Kato, and J. Liu, "Future intelligent and secure vehicular network toward 6G: Machine-learning approaches," Proc. IEEE, vol. 108, no. 2, pp. 292–307, Feb. 2020.

[10] S. Zhang, C. Xiang, and S. Xu, "6G: Connecting everything by 1000 times price reduction," IEEE Open J. Veh. Technol.,vol.1, pp. 107–115, Mar. 2020

IoT Based Automatic Pest Monitoring and Fertilizer Healing By Sprayer for Enhancing Growth of Plant

[1]Gowthami.D, [2]Bhavadharani.M, [3]Indumathi.M, [4]Logamoorthi.S, [5]Vasanth Kumar.V

[1] Assistant Professor, Department of Electronics and Communication Engineering, Nandha College of Technology, Erode, Tamil Nadu, India
[2,3,4,5] UG Scholar, Department of Electronics and Communication Engineering, Nandha College of Technology, Erode, Tamil Nadu, India

Abstract - Farming has extraordinary future for innovative propel, Agriculture field can be utilized through Internet of things (IOT). And Agricultural disease and insect pests are one of the most important factors that seriously threaten agricultural production. Early detection and identification of pests can effectively reduce the economic losses caused by pests. Normally, the plants need to be water which is used for general plant car as part of caring or small and large gardens. Automated water system in light of soil moister and temperature can accomplish by inserting Node MCU board with simple receptive soil sensors. And also, in this technology, the humidity and temperature of plants are precisely controlled. In advancement an Android based Blynk App interface will be organized to use mobile interface to make a remote telemetry framework to be utilized as a part of the field of horticulture. In this study , we propose useful, low cost power efficient for solar based by orientation of solar panel in the direction of the sun for providing the necessary power source in remote areas or in the field of agriculture where it is not possible to provide charge through a stable current supply. This technique is not so much advanced but rather more effective with the smart agriculture monitoring system. With the help of image processing we can identify the pesticides what we need to provide the plant for a better growth. Also with the help nutrients sensor we can determine the type of nutrient what needed and therefore helps to enrich the growth of the plant.

Keywords- Pesticides, smart agriculture, nutrient, blynk app and soil moisture sensor

INTRODUCTION

Agriculture in India has an extensive background which goes back to ten thousand years. At present, India holds the second position in the world in agricultural production. The agriculture is one of the oldest occupation all over the world, but in recent days its economy has fallen to a greater extinct also people are not ready to enroll themselves in these works. Agriculture is everything involved with growing plants to be used for something else. Nearly 58% peoples life is depend on agriculture basis in India.14% GDP contributed by agriculture. Without the use of pesticides, more than half of our crops would be lost to pests and diseases. Between 26 and 40 percent of the world's potential crop production is lost annually because of weeds, pests and diseases. Without crop protection, these losses could easily double.

Therefore some advancement in this field is needed to improve the economy of the farmers by introducing IoT based smart agriculture monitoring and control system. This system is controlled by an application in a mobile as we can monitor and control them easily, this helps in advancement of agriculture fields. For instance, we use agriculture to raise the grow food, such as tomatoes, carrots, etc. The importance of agriculture make us less dependent on other foreign countries, provides food and shelter and also provides us with

income to the farmer and revenue to the government.

OBJECTIVE

The objective is to provide a solution to the dying agriculture zone with a smart IoT system to bring them back to life. Also to make proper growth of plants in a smart way by monitoring and controlling them from remote places. Real time agricultural superintend and pest also fertilizer recognition system on mobile application are evaluated based on intelligent pest and fertilizer identification and environmental IoT data.

All plants need certain mineral nutrients to survive. Most soils usually have enough of these minerals to keep plants healthy. However some nutrients are gradually used are wasted out of the soil, and need to be replaced to maintain optimal growth and appearance. The current research provides the location of the pest and extent of pests to farmers can accurately use pesticide application at precise time and place and then reduce the agricultural workforce required for timely pest control, thus achieving the goal of growth for plants.

And this agriculture research is to ground a decision making support system for farm management. Smart farming deems it necessary to address the issues of population growth, climate change and labour that has gained a lot of technological attention, from planting and watering of plants to health and harvesting.

PROBLEM DESCRIPTION

Agricultural operations including animal and plant farming are important contributors to the depletion of water resource quality and quantity in the United States. Agriculture represents approximately 40% of total U.S. water demand, and irrigation is the largest consumptive water use. Indian farmers are facing the problem of low income from their marketable surplus plants in the absence of proper organized markets and adequate transportation facilities. Scattered and sub- divided holdings are also creating serious problem for marketing their products.

When compared to other countries, India is the largest producer of pluses, spices and their products. There is no fixed time of rain and the amount of rain fall is less due to global warming and also the climate changes are happen nowadays. Problems in agricultur were chanllenging but green revolution solved the problems with the introduction of Chemicals, fertilizers, and pesticides.

PROPOSED SYSTEM

The smart agriculture system is used to monitor and control the irrigation system and provide enough sunlight to grow the crops as per our need. By considering the temperature, humidity and soil moisture the analysis is done and the calculation part s carried over the micro controller. The range of valves varies from time to time but there is a standard temperature, humidity and soil moisture for all so that it will be maintained with the smart agriculture system. They are maintained by turning on the irrigation system and sun bulb to control the level of temperature, humidity and moisture. This entire system is monitored and controlled by using a mobile application.

METHODOLOGY AND BLOCK DIAGRAM

The identification and prevention of crop diseases and insect pests is a continuous research topic. With the development of technology, many sensor networks and automatic monitoring systems have been proposed. A method of detection of specific disease pest/disease can be detected by the real time system with weather data. The central sever provide forecast service of weather

condition and disease. Another kind of solution related of monitoring traps which are used to capture pest is with the help of image sensors and designed and implemented a low power consumed system which is based on wireless image sensors and powered by battery. The frequency of capturing and transferring trap images of sensors can be set and remote adjusted by trapping application.

In this project, an automatic watering system is more beneficiary nowadays or the enhancement of agriculture. Also the yield by this method better while finding the diseases faster or earlier giving fertilizer at a right time to the adequate amount. The smart agriculture system is used to monitor and control the irrigation system and provide enough sunlight to grow the plants as per our need.By considering the temperature, humidity and soil moisture the analysis is done and carried over the micro controller. The range of valves vary from time to time but there is a standard temperature, humidity and soil moisture for all so that it will be maintained with the smart agriculture system.They are maintained by turning on the irrigation system and sun to control the level of temperature, humidity and moisture.This entire system is monitored and controlled by using a mobile application.

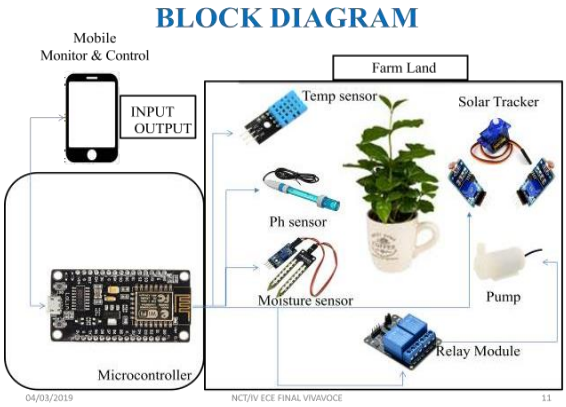

Figure 1: Smart Irrigation & Solar Tracker

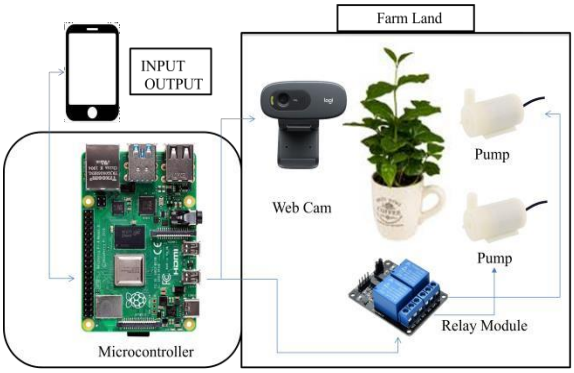

Figure 2: Pesticide detection & Sprayer

There are three major stages on this, starting from the feeding of automatic water supply fertilizer and pesticides for the plants. The first stage is the finding the soil moisture level and feeding water to the plants requirement. Once the plants get enough water is intimated to the farmers through a mobile application. The second stage is the adding fertilizer to the soil by using sensor the requires amount of fertilizer to the plant is given. Finally, important stages is the pest detection and controlling using image processing technology and using a rotatable sprayer pump to sprayed all around the plants.

Pesticides

Pesticide sensor is basically a chemical sensor that transforms chemical information, such as the concentration of a specific pesticide or chemical element into an analytically, readable and useful signal. For the past years, there are extensive efforts have been contributed to develop pesticides for monitoring the pesticide residue in the drinking water and food.

Pesticides are chemicals widely used in modern agriculture to sway a various types of agricultural insects that usually damage crops as well as they used to enhance the yields productivity. Although pesticides are directly sprayed to the plants, but only 1% of the applied pesticide is successfully reached the pests or insects and the other amount of pesticides are stick to the vegetables and fruits

and remain on it. The remained amount of pesticides in the food has become one of the most alarming challenges due to their harmful consequences to human health. Pesticides also have been used for non-agricultural applications such as insects' control in the atmosphere environment, grass management, and pets care in the accommodation, and industrial vegetation control. Therefore, it will also leave harmful residues into the environment such as the agricultural soil, drinking water, and food. Thus, the detection of pesticides residues considers as a challenge for food and water safety management, and environment protection.

Additionally, pesticides have been classified into two different groups, the chemical pesticides and biopesticides. The chemical pesticides are synthesized chemicals that directly kill the insects, where the biopesticides are obtained naturally from natural sources such as oil, animals, and bacteria. The chemical pesticides are classified into five different types depending on their application, there are insecticides, herbicides, and fungicides, rodenticide, and nematicides. However, the chemical pesticides are the most common used in the food agricultural especially the insecticides pesticides.

With the rapid development of computer vision technology, automatic disease and pest localization and recognition has become a research hotspot in recent years . All the above methods could achieve satisfactory performances, but they aim to detect pests under simple background conditions rather than with the complex backgrounds typical of the field environment. In practical application, the scales, different attitudes, complexity of image background and illumination are the major challenges in pest localization and recognition. These traditional approaches always have low accuracy and poor robustness in practical pest monitoring. Recent advances in deep learning techniques based on IoT have led to significantly promising progress in object localization and recognition under natural conditions

Therefore, we propose an effective data augmentation strategy for IoT based pest localization and recognition in field, which improves performance by the following aspects. Firstly, in training step, a data augmentation method is proposed for generating multi-scale detection model. Secondly, for pest localization and recognition, a test time augmentation strategy is used. We split the input image into four different scales for detecting pests of different sizes. The four detection results are fused for the final result. Compared to three state-of-the-art approaches, our method achieved satisfactory results.

HARDWARE AND SOFTWARE

SOIL MOISTURE SENSOR (YL38)

A Soil Moisture sensor aims to accurately measure the soil's moisture content. When the moisture value recorded is above the threshold, low level (0V) will be the output and if recorded to be below the threshold, high level (5V) will be the output. The digital pin reads the current soil moisture value to see whether it is above threshold or not. The threshold voltage can be adjusted with the help of a potentiometer.

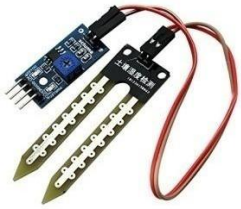

pH SENSOR

pH is a measure of acidity or alkalinity of solution which can be determined by the relative number of hydrogen (H+) or hydroxyl (OH-) ions present in the solution. A pH value below 7 is considered acidic and one above 7

is considered basic. The pH can change with temperature.

DHT SENSOR (DHT11)

The DHT11 sensor is a basic and ultra low-cost humidity and digital temperature sensor. It makes use of a capacitive humidity sensor and thermistor to measure surrounding air, and outputs a digital signal on the data pin. It is relatively simple to use, but it requires precise timing to grab data.

- Good for 20-80% readings of humidity value with 5%accuracy
- Good for 0-50°C readings of temperature value ±2°Caccuracy
- It is low cost
- It has 3 to 5V power and I/O
- It has a max current usage of 2.5mA during conversion

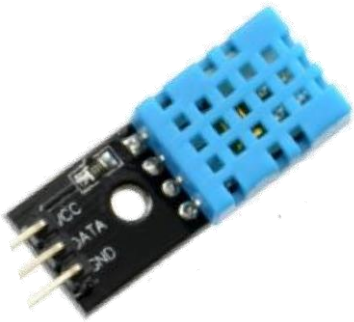

Table 1: SENSORS THRESHOLD VALUES

Sensors used	Physical value of the sensor	Decision to do
Soil moisture	If >1100 If <1100	Stop pouring water Pour water
Temperature of atmosphere	If > 25c and <50c If < 0c and >25c	Plant healthy Plant unhealthy
Humidity of atmosphere	If >50 and <80 If <50 and >80	Plant healthy Plant unhealthy

WI-FI MODULE (ESP8266)

The ESP8266 is a self – contained System on Chip (SOC) with integrated TCP/IP protocol stack that gives the microcontroller access to a Wi-Fi network. Each of these modules can simply be connected to the device to procure Wi-Fi ability. The module has a powerful on-boarding process and has a high storage capacity which allows it to be integrated with sensors used as well as other application specific devices that may be present. The module collects all of the recorded sensor data, later transferring it to the cloud by using Wi-Fi connectivity.

RELAY MODULE

Relay module is an electrical switch that is operated by an electromagnet. The electromagnet is activated by a separate low-power signal from a micro controller. When activated, the electromagnet pulls to either open or close an electrical circuit.

RASPBERRY PI

The Raspberry Pi is a low cost, credit-card sized computer that plugs into a computer monitor or TV, and uses a standard keyboard and mouse. It is a capable little device that enables people of all ages to explore computing, and to learn how to program in languages like Scratch and Python.

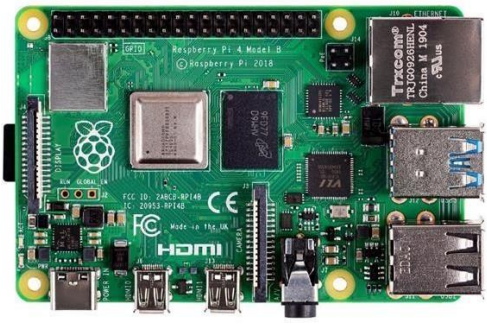

WEB CAM

A webcam is a digital video device commonly built into a computer. Its main function is to transmit pictures over the Internet. It is popularly used with instant messaging services and for recording images.

PUMP

Pumps are often used to pump excess water from work sites or flooded basements in construction sites. They can also be used to pump slurries. Submersible pumps can be used in inland or offshore oil wells to pump oil from the ground to treatment and holding facilities above ground.

BLYNK APP

Blynk is a hardware-agnostic IoT platform with white- label mobile apps, private clouds, device management, data analytics, and machine learning. Blynk is a hardware-agnostic IoT platform with white-label mobile apps, private clouds, device management, data analytics, and machine learning.

IMPLEMNTATION

In order to enable farmers to identify and detect pests and diseases conveniently and quickly, this paper establishes a system based on Blynk app. The program can identify the disease on the leaves of crops with diseases, which is convenient for farmers to understand the situation of diseases and insect pests and to obtain expert guidance. The system first uploads the image, and then transmits the image data to the back-end for processing through the network front-end. Image preprocessing is mainly to optimize the incoming image. First of all, the image is zoomed to meet the requirements of the model input, too large image will seriously affect the efficiency of recognition. Secondly, in order to achieve higher recognition efficiency, the image is cut randomly and the pixels are optimized. Finally, the name and status of the crop with the highest matching degree will be given after the recognition is completed. If the crop is in an unhealthy state, the corresponding guidance will be given and returned to the cell phone.

Image stability

Image stability is the local invariant feature, which means that the natural image will not be affected by the scaling, translation and rotation of the image size. Because in deep learning, data enhancement is generally needed to improve performance, and fully connected feedforward neural is difficult to ensure the local invariance of the image. This problem can be solved by convolution operation in convolutional neural network.

Image Preprocessing

The purpose of image preprocessing is to eliminate the interference of useless information in data set to model recognition, and to expand the data set to a certain extent. The neural network can achieve better training effect. In this way, the recognizability of the image can be effectively improved, so that the recognition accuracy of the model can be improved. At present, the commonly used preprocessing methods include geometric space transformation and pixel color transformation. The former includes flip, crop, rotate, zoom and so on. The latter includes changing contrast, adding Gaussian noise, color dithering and so on. Because of the uneven distribution of data sets, so in this paper, we mainly take the method of light transformation and random clipping. Enhance the feature information of the picture and the scale of the data set itself. The influence of the background factor and the data quantity problem on the model is weakened. It can make the model produce better learning effect and increase the stability of the model.

Normalized Processing

After that above steps are complete, the picture of the data set will be normalized. Normalization can be considered to be an indispensable and important part of the network.It scales the characteristics of each dimension to the same range. On the one hand, it is convenient to calculate data and improve the efficiency of operation. On the other hand, the association between different features is eliminated. Therefore, the ideal model training result can be obtained.

$$x'=x-\mu\sigma$$

where,

x and x' are the data before and after normalization. And μ means the average value while σ means the covariance.

The detection result of the system and the identification result is peach scab, which is a common disease of plants and the identification is accurate after verification.

CONCLUSION

The project mainly helps in monitoring and controlling the irrigation system in an automated by knowing the level of moisture content present in the soil. The concept of image processing helps in determining the disease affected by the plant and the automatic sprayer helps to cure the disease along with the solar tracker there is no issue for the power supply. The main requirement of power is satisfied by the solar tracker as they keep on providing the required power along the suns direction, this provides the constant power supply to the entire system. There is always a difficulty in uneven irrigation of crops as they spoil the nature of crops, with the smart

irrigation system the crops get water at the right time only when they need them.

Smart way of agriculture helps to increase the crop yield and also the pesticide detector and sprayer helps to protect the plant from getting affected so that it remains healthy also the nutrients of the plant is checked constantly so that the crop yielded at high nutrient. These things helps the farmer to provide crops at high yield and nutrients. The outcome of the project is as expected which will over take the existing system. The use of smart farming will make a difference in each and every farmers life, as they get an economical growth in the society after installing this smart system.

FUTURE SCOPE

- We can use the same techniques in sophisticated greenhouse and related resources.
- And we can used for designing on automatic spray fertilizer robot. For an development system we operates zero pollution by spraying fertilizer and pesticides.
- Also same technology can also be extended to a all types of sprayers in future.
- We can monitor more parameters like, pressure and ph of soil and the same time and control them.
- Also the notifications will remind them the status of the farm weather the crops are perfectly irrigated or not.

REFERENCES:

[1] Devika.S.V, Khamuruddeen. S.K, Khamurunnisa.S.K, Jayanth Thota, Khalesha Shaik, "Arduino Based Automatic Plant Watering System", Devika et al., International Journal of Advanced Research in Computer Science and Software Engineering 4(10), October -2014, pp. 449-456 Volume 4, Issue 10, October 2014

[2] Archana P, Priya R, "DESIGN AND IMPLEMENTATION OF AUTOMATIC PLANT WATERING SYSTEM", International Journal of Advanced Engineering and Global Technology Vol04, Issue-01 , January 2016, ISSN No: 2309-4893

[3] Darshna. S, Sangavi.T, Sheena Mohan, Soundharya. A Sukanya Desikan, "Smart Irrigation System", IOSR Journal of Electronics and Communication Engineering (IOSRJECE) e-ISSN: 2278-2834,p-ISSN: 2278- 8735.Volume 10, Issue 3, Ver. II (May-Jun.2015), PP 32-36

[4] Pavithra D.S, Srinath. M.S, "GSM based Automatic Irrigation Control System for Efficient Use of Resources and Crop Planning by Using an Android Mobile", IOSR Journal of Mechanical and Civil Engineering (IOSR- JMCE) eISSN: 2278-1684,p-ISSN: 2320-334X, Volume 11, Issue 4 Ver. I (Jul-Aug. 2014), PP 49-55

[5] Patil. Y. P, Pergad .N. D," Review Paper on GSM based Water Management in Irrigation System Using ARM7", International Journal of Science and Research (IJSR) ISSN (Online): 2319-7064 Index Copernicus Value (2013): 6.14 | Impact Factor (2014): 5.6

[6] Madianos. L, Skotadis. E, Tsekenis. G, Patsiouras. L, Tsigkourakos. M, and Tsoukalas. D, ''Impedimetric nanoparticle aptasensor for selective and label free pesticide detection,'' Microelectron. Eng., vol. 189, pp. 39–45, Apr. 2018, doi: 10.1016/j.mee.2017.12.016.

[7] Nsibande. S. A and Forbes. P. B. C, ''Fluorescence detection of pesticides using quantum dot materials—A

review,'' Analytica Chim. Acta, vol. 945, pp. 9–22, Nov. 2016, doi: 10.1016/j.aca.2016.10.002.

[8] Narenderan. S. T, Meyyanathan. S. N, and Babu. B, ''Review of pesticide residue analysis in fruits and vegetables. pre-treatment, extraction and detection techniques,'' Food Res. Int., vol. 133, Jul. 2020, Art. no. 109141, doi: 10.1016/j.foodres.2020.109141.

[9] C.-J. Chen, Y.-Y. Huang, Y.-S. Li, C.-Y. Chang and Y.-M. Huang, "An AIoT based smart agricultural system for pests detection", *IEEE Access*, vol. 8, pp. 180750- 180761,2020.

IoT Based Voting Machine by Fingerprint Identification and Verification Using Arduino

[1]M. Esakkiammal, [2]R. Suguna, [3]Mrs. R. Chandrika

[1,2] UG Students, B.E Department of Electronics and Communication Engineering, Sardar Raja college of Engineering, Alangulam, Tirunelveli, Tamil Nadu, India
[3] Assistant Professor, Department of Electronics and Communication Engineering, Sardar Raja college of Engineering, Alangulam, Tirunelveli, Tamil Nadu, India

Abstract - In India voting is an important way where the citizen can cast their vote. Usually voting is done by casting their vote in polling booth. As the technology increases, nowadays electronic voting machine is used for casting vote. This paper is about an IoT based voting machine with fingerprint verification and identification using arduino. The main aim of this project is to make voting secure using fingerprint verification and also to reduce malpractices. The details of the voter along with their fingerprint in stored in database. If the fingerprint matches with the stored fingerprint, the system checks the Aadhar number of the user and if authenticated, it checks if multiple votes have been cast. If the fingerprint matching is not correct "Matching failed" message will be displayed and if aadhar number is not correct, then "Aadhar not match" message will be displayed. Voter can enter his/her native place and vote for the corresponding candidate using thing speak and the result can be obtained. This system does not require any third-party service for its operation. It is a low-cost system, flexible and easy to operate.

INTRODUCTION

Voting is the right of each citizen to cast the vote and select their leader. People also have the right to change the ruling party in upcoming election by voting for the candidate. Voting is not done to elect the government leaders, but also conducted to elect the leaders in schools, colleges, banks, society, etc. Biometrics is a way used to recognize a person based on his physical nature. The fingerprint, iris, face, voice, etc. are the mainly used biometrics to recognize a person. The existing system is not very efficient and reliable and also manual approaches are required for verification, which consumes more time. At present, balloting unit and control unit are used to conduct the voting. Balloting unit is used by the voter to choose the candidates while control unit is used by the Polling officer to allow the user for voting. But in the existing system, illegal voting is possible by the invalid voter. Fingerprint is unique for each individual so, it can be used as a mark of signature, verification and authentication. Fingerprint is the biometric which is used in this project. Finger-print will be different for each individual. In this project, fingerprint is used for the authentication of the user and allows him to cast vote based on his fingerprint image. Fingerprint recognition is a very complex process; hence it is necessary to build a system easily that automatically recognizes the fingerprint with low computational cost and high level of accuracy. Fingerprint matching is based on the information contained on fingerprint image namely, minutia, delta, shape, core, pores etc. Minutia primarily based matching algorithm is useful in many programs and usually carry out with high accuracy.

LITERATURE REVIEW:

R. Murali Prasad, Polaiah Bojja, Madhu Nakirekanti [Murali Prasad 2016] discuss about the user login with the Aadhar number and a password. Then checks whether that person is eligible for casting vote. This paper examines policy regarding the electronic

approaches and developments towards electronic data storage and transmission. In this paper the user should first show their fingerprint and checks whether are his eligible for casting his vote. Fingerprint reader reads the detail of the voter from the tag. The information obtained from the reader is passed to the controller, and then checks with the already stored data. If it matches with stored data then that person is allowed to vote or poll his vote. If its information read from the fingerprint reader does not match with the stored data a message will be displayed on the LCD display. Voting is done using switches.

Rahil Rezwan, Huzaifa Ahmed, M. R. N. Biplob, S. M. Shuvo, Md. Abdur Rahman [Huzaifa 2017] proposed a system which will be used in a country like Bangladesh. The system is based on electronic voting machine. They created a database which stores the fingerprint of the voter. When the fingerprint is placed it checks for matching with the created database. The system identifies if the voter is not registered and casting vote more than one time. If it matches with the database then that person can vote. The system counts the vote and it is able to show the result after certain period of time. This system allows showing result faster. This system helps in becoming more accurate and less time in publication of the result.

Anandaraj S, Anish R, Devakumar P.V [Anandaraj 2015] discuss about the existing voting methods. The various type of voting machine introduced. The disadvantages of electronic voting machine are described in this paper. It says that in the electronic voting machine the voter will be able to obtain any acknowledgement after casting vote. Votes are been counted manually. This paper describes a simple and secured method of polling vote by using biometric. The main aim at increasing the flexibility security, reliability, scalability of the model and provide less time consumption to announce the result. Fingerprint module is used here for voting. Fingerprint detail of a person is already stored in government database. Voting machine is connected to a computer, which contains the full database of the people who is eligible for voting. Touch screen is used because it is user friendly. The printers are used in-order to get the authentication poll. GSM module is used to send results to the corresponding authority.

PROBLEM STATEMENT:

Electronic voting machine is used nowadays for polling vote. Electronic voting machine consists of two parts: one is control unit and other is balloting unit. The control unit is controlled by the presiding officer and after the verification; voter will be allowed to poll his vote. The balloting unit is inside the voting compartment. When the verification is completed by the presiding officer, he presses the ballot button then the voter can cast his vote. Voter use the button against name of candidate which he wants to vote. In the existing system voter needs to carry his ID card for verification. The presiding officer will check with the list and ID card for verifying of the voter. This is time consuming. There are some problems with this existing system. One problem is neither authority nor anyone else can link any ballot to the voter. Another problem is one can change the program installed in the EVM (security problems). Another problem is (verifiability) independently verification of that all votes have been counted correctly. Availability is another problem the system works properly as long as the poll stands and any voter can have access to it from the beginning to the end of the poll. One candidate casts the votes of all the members or few amounts of members in the electoral list illegally is also one of the problems in existing system.

PROPOSED SYSTEM:

In this system we are using fingerprint as the biometric method of verification and it's both on-line off-line versions. The voter's fingerprint and Aadhar number is enrolled and stored in a database. During the process of voting the first system ask for the Aadhar number if it matches with the stored Aadhar number, it checks whether the fingerprint matches. If the fingerprint matches, then system checks whether that person has voted before, for the same election. If he has not voted then

"Fingerprint and Aadhar number matches. Cast vote" message be displayed. After voting, the register will be incremented. If that person has voted before, then "already voted" message is displayed along with a buzzer sound. For voting, first the system asks for entering the native place, it is done using keypad. Then the voter is allowed to vote for the candidate he wants. Voter's vote and time of voting is saved in thing speak. The result also will be obtained. Since this system uses thing speak, it can be used for postal voting also. There should be a polling officer in-order to control voting. The voter can vote from candidate of their native place since the system is on-line.

BLOCK DIAGRAM:

It consists of display, indicator, fingerprint sensor, voting button, laptop, driver, buzzer, power supply and ARDUINO UNO Atmega 328p.

WORKING:

First the voter should enroll his Aadhar number and fingerprint. During the process of voting, it checks with enrolled data if it matches, then check if there exists any previous entry against that user. If that voter has voted before, "Already voted" message will appear along with a buzzer alarm. If not voted before, he can cast his vote through Thing Speak where he selects his native place and cast vote and a register will be incremented. Then at the end of the voting, the result can be obtained. used to check the voter identity and the main target of this process is to identify that which voter has accessed the system. If fingerprint is matched with any of the templates then information stored along with that template is used for further processing. Verification is the process to check whether the user is valid for voting or not. One to one matching is performed in this process. It can also monitor that voter has voted once or more. More than one vote by the same candidate is not allowed in this system. After the process of verification voting is allowed to the user. In the process of election, voting machine is constructed with the help of push buttons, LED, buzzer and LCD screen.

CONCLUSION:

The concept proposed here is a voting system based on IoT. As India is a democratic country, all the citizens have the right to choose a person to lead them. World is becoming completely digitized. As a part of digitization, here voting is also digitized. One of the benefits of this project is that it reduces the time taken to announce the result. Here, the system is made more secure by introducing biometric and Aadhar number verification. This system allows one person to vote only once. Multiple voting is not allowed. This system can be used for postal voting also.

REFERENCES:

1. **[Anandaraj 2015] Anandaraj S, Anish R, Devakumar P.V**, "Secured electronic voting machine using biometric". IEEE, 2015 International Conference on Innovations in Information, Embedded and Communication Systems, .19-20 March 2015
2. **[Ashok 2012] D. Ashok Kumar, T. Ummal Sariba** Begum Department of

Computer Science, Government Arts, College," Electronic voting machine, International Conference on Pattern Recognition, IEEE, Salem, Tamilnadu, India, 21-23 March 2012.

3. **[Huzaifa 2017] Huzaifa Ahmed, M. R. N. Biplob, Md. Abdur Rahman, Rahil Rezwan, S. M. Shuvo**, "Biometrically Secured Electronic Voting Machine," 2017 IEEE Region 10 Humanitarian Technology Conference (R10-HTC), Dhaka, Bangladesh. 21 - 23 Dec 2017.
4. **[Murali Prasad 2016] R. Murali Prasad, Madhu Nakirekanti, Polaiah Bojja,** "AADHAR based Electronic voting Machine using Arduino". International Journal of Computer Applications (0975-8887) Volume 145 - No.12, July 2016International Journal of Applied Engineering Research ISSN 0973-4562 Volume 15, Number 1, 2020 (Special Issue)

IoT Based Marine Oil Spilage Identification and Filtering Using Robot

[1]Dr.R.Jayanthi, [2]K.Aarthidevi, [3]S.Kavya, [4]R.Pravin Kumar, [5]S.P.Tharman

[1] Professor, Department of Electronics and Communication Engineering, Nandha College of Technology, Erode, Tamil Nadu, India

[2,3,4,5] UG Scholar, Electronics and Communication Engineering, Nandha College of Technology, Erode, Tamil Nadu, India

Abstract - The researchers and oil companies are trying to take some precaution for the problem of oil spill in sea, river or on ground etc. A lot of work concerned by removing the oil from water, there are many advanced tools used for this task. This project presents a boat system that works on the surface of water to help cleaning up marine oil spills using a skimmer as a collecting tool, the aim of this boat system is to surround the oil spill in certain position for fast and easy cleaning and prevent it from spreading wider. Concept of this project is to clean oil spills in seashore and marine. The boat is operated and controlled by laptop and oil spill is cleanup monitoring using camera. For about Five km can enable the periphery. Rising oil dumped in the sea towards the remote mode, the tool does apparent.

Keywords- Oil spill,ASV, mitigation, bioremediation.

INTRODUCTION

Human Directly or indirectly , of substances or energy into marine environment, including estuaries, whichresult or is likely to result in such deleterious effects as harm to living resources and marine life. An oil spill is the release of a liquid petroleum hydrocarbon into the environment due human activity and is a form of population. The term is usually applied to marine oil spills. Toxicity of a fuel is 20ppm for fish and 0.4-0.6ppm for other result or is likely to result in such deleterious effects as harm to living resources and marine life. Marine animals the rate of degradation by natural means vary from 36-350 microorganisms/sq. m per year. The iso prenoids, oil cyclic and aromatic components of crude oil have been detected. Oil Spill Mitigation project propose to overcome previously described techniques the development of autonomous and coordinated able to increase the efficiency of the bioremediation process. Here we use skimmer sucks the oil up like a vacuum cleaner, blot the oil from the surface, skim off the top layer of oil into containers.

The robots suck oily water and spin the liquids, sending denser water to the outside and creating a stream of oil in the centre. water that exists the robot is 99 percent pure.oil collected during the process is stored in bladders, which can later be removed by crew members to recycle. Each robot can cleanse up to 2,000 gallons of oil per minute,Scrubbing the oil spill in just a few days.AEROS (Airborne Emergency Response to oil spills) is fully robotics, requiring no human near the water, thus avoiding human contact with toxic vapours and corrosive crude oil. Cleaning oil spills is an expensive proposition If the Spills can be contained as they happen, the cost and damage to the ecology can be minimized, if eco-friendly robots are quickly deployed to the spill area. The robots can work quickly and efficiently, including deeper penetration to collect more oil. Robot do not have to worry about bad weather as they go about their job.

EXISISTING SYSTEM

The existing system is the process in which the identification of oil spills in the marine by using the polar metric Synthetic Aperture Rader Pol (SAR) from the satellite.The feature extraction are by using the deep learning methods based on the Convolution Neural Network (CNN).The system can be explain by the following images Fig(1) & Fig (2).

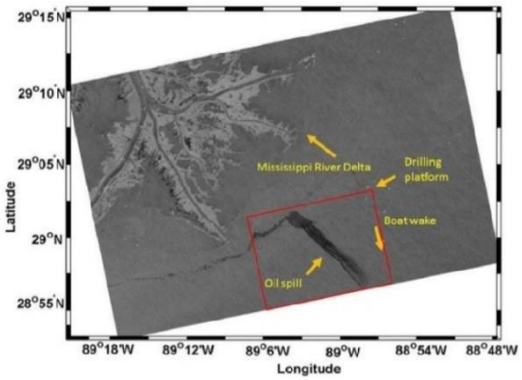

Fig 1: Marine oil spill images of the RADARSAT-2 Datasets 1.

The red box in the figure 1,2 is the experimental area, the size of the subsets extraction from the images in terms of pixels and more detailed data imaginary parameters are seen from the PolSAR oil spill.

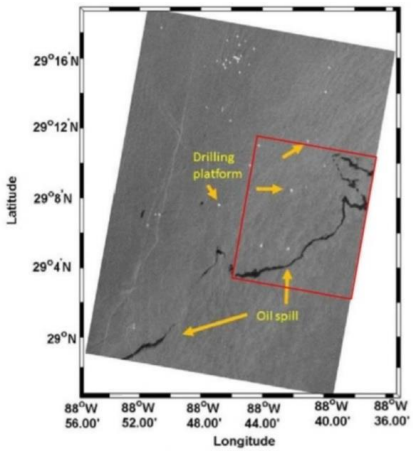

Fig 2: Marine oil spill images of the RADARSAT-2 Datasets 2.

Image of Figure 1, 2 the oil spill shows as dark spots on the SAR images. There are also some other oceanic phenomena or targets present in the images, such as ships, ship wakes, drilling platforms, and so on.

PROPOSED SYSTEM

The proposed system is the removing of oil spills in the marine by using the robot. The Robot can be controlled by the coding techniques by using ARDUINO 1.8.4 and the spill can be removed by the cotton. The cotton can be handled by the motor of AT MEGA 328 motor driver and can be operated by the power supply. The oil can be sucked by the cottons and stored in the submersible pumps. The spill can't be removed completely but affecting of the marine organisms will be protected.

METHODOLOGY

Robotic Vehicle for oil spills cleaning with Nano particles. The Robots suck oily water separating clear water to the outside and creating a stream of oil in the center.oil collected during the process is stored in box, which can later be removed by crew members to recycle in magnetic fields.

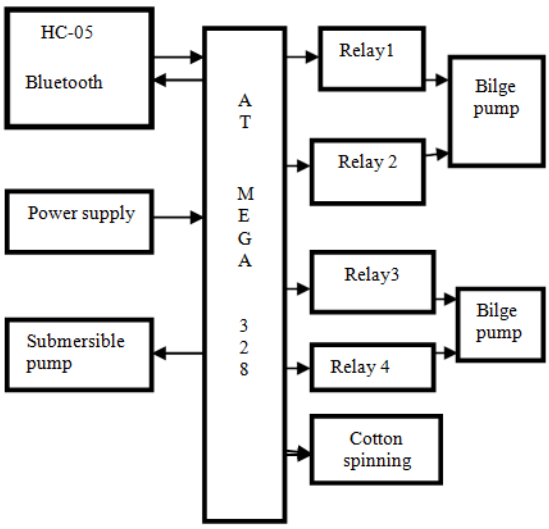

Fig 3: Block Diagram for removing of oil spill from marine.

RELAY MODULE :

The Relay module is a separate hardware device used for remote device switching. With it you can remote control devices over a network or the Internet. The Relay Module houses two SPDT relays and one wide voltage range, optically isolated input.

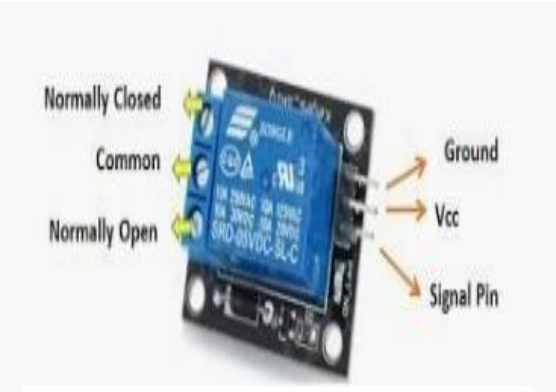

Fig 4: Relay Module

Fig 5: Submersible Pump

POWER SYSTEM:

The Power system is a network which consistsgeneration, distribution and transmission system. It uses the form of energy (like coal and diesel) and converts it into electrical energy. The power system includes the devices connected to the system like the synchronous generator, motor, transformer, circuit breaker, conductor, etc.

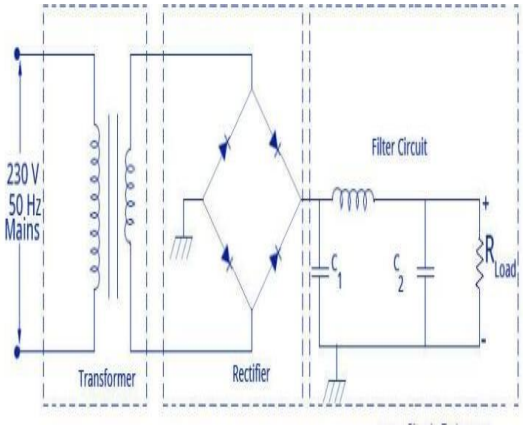

Fig 6: Circuit Diagram

ARDUINO:

The Arduino is a microcontroller board based on the ATmega328. It has 14 digital input/output pins (of which 6 can be used as PWM outputs), 6 analogy inputs, a 16 MHz ceramic resonator, a USB connection, a power jack, an ICSP header, and a reset button. It contains everything needed to support the microcontroller; simply connect it to a computer with a USB cable or power it with a AC-to-DC adapter or battery to get started.

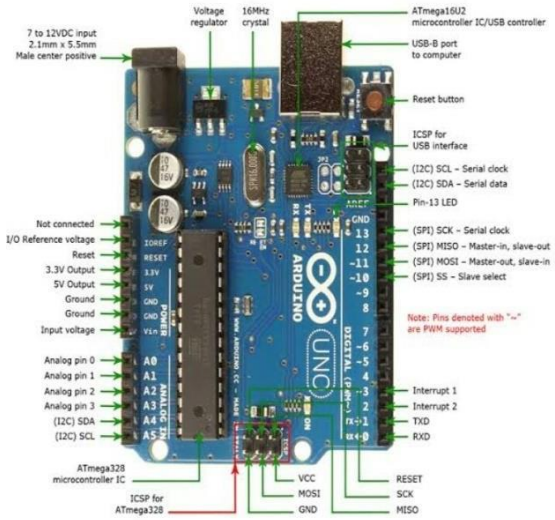

Fig 7: Ardunio Board

Input Voltage (limits)	6-20V
Digital I/O Pins	14 (of which 6 provide PWN output)
Ana log Input Pins	6 (A0 – A5)
DC Current per I/O Pin	40 mA
DC Current for 3.3V Pin	50 mA
Flash Memory	32 KB (AT mega 328) of which 0.5KB used by boot loader
SRAM	2 KB (ATmega328)
EEPROM	1 KB (ATmega328)
Clock Speed	16 MHz

HC-05 BLUETOOTH :

Serial Bluetooth module for Arduino and other microcontrollers. Operating Voltage: 4V to 6V (Typically +5V).Operating Current: 30Ma.Range: <100m.Works with serial communication (USART) and TTL compatible. Follows IEEE 802.15.1 standardized protocol. Uses Frequency-Hopping Spread spectrum (FHSS).Can operate in Master, slave or Master\Slave mode. Can be easily interfaced with Laptop or Mobile phones with Bluetooth. Supported baud rate: 9600, 19200, 38400, 57600, 115200, 230400, 4.

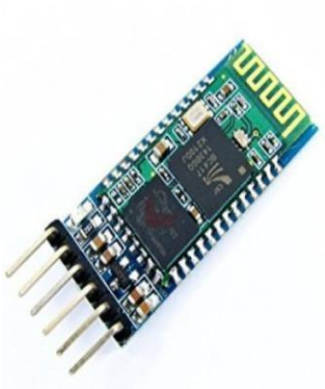

Fig 8 : HC-05 Bluetooth

BILGE PUMP:

A Bilge pump is a water pump used to remove bilge water. Since fuel can be present in the bilge, electric pump are designed to no cause sparks. Electric bilge pumps are often fitted with float switches which turn on the pump when the bilge fills to a set level. Since bilge pumps can fail, use of a backup pump is often advised. The primary pump is normally located at the lowest point of the bilge, while the secondary pump would be located somewhat higher. This ensures that the secondary pump activates only when the primary pump is overwhelmed or fails, and keeps the secondary pump free of the debris in the bilge that tends to clog the primary pump.

Fig 9: Bilge Pump

COTTON SPINNER:

Oil clings to the surface of the cotton fibers. The fibers may also absorb oil, bringing it inside the fibers. Cotton can soak up oil by letting it flow into channel-like spaces that form between its before.

Fig 9: Fuel and oil absorbent roll

RESULTS / DISCUSSION

According to the fore mentioned experimental results, PolSAR oil spill are visualize the deep features and discuss in superiority. It Only identified the problem through with the help of satellite. The deep failures obtains a strong identification between the oil spill and sea water with no other false alarm. Compared with polarimertic features extracted.

Now days, Natural recourse are polluted in different type air pollution, land pollution, soil pollution, and marine pollution. Here we uses one of the best method for control, prevent and to maintain the marine areas.

CONCLUSION

Most of the Oil spills and more serious accidents are caused by human errors. Transport by tank barges raises particular concerns, given the relatively spill rates from these vessels. The difference in these characteristics are often quite small, and little technology is available for determining them.

Engineered systems for containing oil in the water columns or on the seabed are few and only work in environments with low currents and minimal waves. The large difference between the overall spill rates, as well as the decreasing number of oil spills from tankers in recent years, raises concerns regarding the performance of barges.

FUTURE SCOPE

Oil spill removing method is used to avoid the environmental pollution. Other deep learning frameworks should considered, such as FCN-60, Segnet-61, Resent-50, and so on. Research on models can be carried out to further improve the accuracy and generalized performance of the models.

REFERENCES:

[1] Brekke.C and Solberg A.H.S., ``Oil spill detection by satellite remote sensing," Remote Sens. Environ., vol. 95, no. 1, pp. 1_13, Mar. 2005.

[2] Fingas M.F. and Brown C.E.,`Review of oil spill remote sensing," Spill Sci. Technol. Bull., vol. 4, no. 4, pp. 199_208, Jan. 1997.

[3] Li .X ,Li .C, Yang .Z , and Pichel.W,``SAR imaging of ocean surface oil seep trajectories induced by near inertial oscillation," Remote Sens.Environ., vol. 130, pp. 182_187, Mar. 2013.

[4] Migliaccio .M, Nunziata. F, Montuori .A, Li.X, and Pichel W.G,``A multifrequency polarimetric SAR processing chain to observe oil _elds in the gulf of Mexico," IEEE Trans. Geosci. Remote Sens., vol. 49, no. 12, pp. 4729_4737, Dec. 2011.

[5] Migliaccio .M, Nunziata .F, and. Buono .A , ``SAR polarimetry for sea oil slick observation," Int. Remote Sens. J, vol. 36, no. 12, pp. 3243_3273, Jun. 2015.

[6] Nunziata .F, Migliaccio .M, and Li.X, Sea oil slick observation using hybrid-polarity SAR architecture," IEEE J. Ocean. Eng., vol. 40, no. 2, pp. 426_440, Apr. 2015, doi: 10.1109/JOE.2014.2329424.

[7] Song.D, Ding.Y, Li.X , Zhang. B, and Xu.M, ``Ocean oil spill classi-_cation with RADARSAT-2 SAR based on an optimized wavelet neural network," Remote Sens., vol. 9, no. 8, p. 799, 2017.

[8] Wenguang .W, Fei.L, Peng.W, and

Jun .W, ``Oil spill detection from polarimetric SAR image," in Proc. IEEE 10th Int. Conf. Signal Process. Proc., Oct. 2010, pp. 832_835.

[9] Xu.Q, Li.X, Wei.Y, Tang.Z, Cheng.Y, and Pichel.W.G, ``Satellite observations and modeling of oil spill trajectories in the Bohai sea," Mar. Pollut. Bull., vol. 71, nos. 1_2, pp. 107_116, Jun. 2013.

[10] Zhang.B, Li.X, Perrie.W, and Garcia-Pineda.O, ``Compact polarimetric synthetic aperture radar for marine oil platform and slick detection," IEEE

[11] Trans. Geosci. Remote Sens., vol. 55, no. 3, pp. 1407_1423, Mar. 2017.

IoT Concept: Sudden Infant Death Syndrome

Saikiran Pagadala

Department of Electronics and Communication Engineering, R.M.D Engineering College, Tamil Nadu, India

Abstract - Sudden infant death syndrome (SIDS) is defined as the sudden unexpected death of an infant <1 year of age, with onset of the fatal episode apparently occurring during sleep, it is one of the major causes of death among infants during their sleep. The wearable IOT device is a wireless sensor node integrated in a chest belt, and it has the capacity to monitor different parameters. The parameters are sent to mobile App through Bluetooth. The values are then sent to cloud. All the parameters can be retrieved to mobile app. through which the doctors and caretakers can look after that parameters and can keep the track on baby health.

INTRODUCTION

Sudden Infant Death Syndrome (SIDS) is defined as the sudden unexpected death of an infant <1 year of age, with onset of the fatal episode apparently occurring during sleep, it is one of the major causes of death among infants during their sleep. The wearable IOT device is a wireless sensor node integrated in a chest belt, and it has capacity to monitor different parameters. The parameters are sent to mobile app through Bluetooth. The values are then sent to cloud. All the parameters can be retrieved to mobile app. Through which the doctors and caretakers can look after that parameters and can keep the track on baby health. SIDS is also called as crib death. It is one of the disastrous disease developed in between the age of one month to one year of age. The exact cause of SIDS disease is not known, even after the autopsy. In 2002, Dror lederman has developed Hidden Markov Model in Infants cry classification. This method is used to classify the cry of the child. In 2011, Shruthi Priya Iyar has designed low cost Infant monitoring and communication systems. It is used to measure the body temperature. In 2018, Toshaljeet kaur proposed the baby monitoring room prototype using IOT In this the whole room is set to sense the activity of the infant. All the home appliances become connected to internet, which make them smart device as they can work by their own. It checks whether the baby is sleeping or not and also checks if the room condition is favourable for the baby or not. It uses WI-FI and Bluetooth technology for short range communications. In 2019, Nedheela. N. Nazar designed a smart cradle using IOT. The smart cradle consists of temperature and wetness sensor which is used to detect the temperature and wetness of the baby. If it increases beyond a particular range, a message will send to the parengts with the help of blynk server. It also contains the MIC in the cradle . If the baby cries, the cradle will start swinging with the help of a dc motor and a sing will be played through the speaker.

The proposed system of our aims to measure the breathing rate and temperature of the infant. The wearable IOT device is a wireless sensor node integrated in a chest belt, and it has the capacity to monitor different parameters. Mainly our aim to connect the IOT device with a cloud platform. There are many proposals for the SIDS but not justified with the cloud platform. The chest belt has a sensor and find out the breath in and breath out rate for a baby, and it identifies the temperature, and finds whether the baby is sleeping in the correct position or wrong position for every sec and minute. The parameters are sent to mobile App through

Bluetooth. The values are then sent to cloud. All the parameters can be retrieved to mobile app through which the doctors and caretakers can look after that parameters and can keep the track on baby health.

PROPOSED FRAME WORK

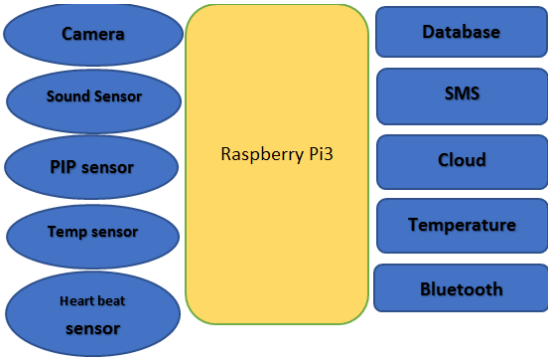

Heart Beat Sensor:

Heart beat sensor is designed to measure the pulse rate of the infant. It operates at a voltage range of 3.3V or 5V with a current of 4mA. It is also used in mobile application. It includes as amplification and cancellation circuit. The normal range of pulse rate for people of all ages during sleep and when alert are tabulated below.

S.NO	Age group	Pulse rate when alert	Pulse rate in sleep
1	1month-1year	100-150	90-160
2	1year-2years	70-110	80-120
3	3years-5years	65-110	65-100
4	(6-11) years	60-95	58-90

Temperature sensor:

Temperature sensor is used to measure the temperature of the infants. It Operates the voltage between 3V to 5V. LM35 series are the precision integrated- circuit temperature sensor. The sensor value ranges from (-50 to 150) degree Celsius. It provides a linear response. The linear output voltage is proportional to Celsius. The positive pin is connected to 5V from raspberry pi and the date pin is connected to ADC and the negative pin is connected to ground .The ADC stores 10 bit data.

The analog output from LM35 is connect to ADC. It coverts an analog input to ground.

The normal and the fever temperatures of all age groups of people are tabulated below

PIR sensor:

PIR sensor is a kind of motion detection sensor. Passive Infrared sensor senses the IR radiation from the human body. When PIR sensor detects IR radiation, it starts the web camera. It is made up of pyro-electric sensor, which detects the level of IR radiation from the human body. The sensing ranges from 5m to 12m. It is very small, inexpensive, easy to use and does not wear out. It is also used in security system. In SIDS prevention system, the PIR sensor is placed in the cradle. The PIR sensor will turn ON the web camera, when it detects the infrared radiation from the infant. The range of infrared radiation from human body is less than the visible light. The webcam captures all the motion of the infant and the information will be store in the cloud. When the baby is out of the cradle, PIR sensor will not detect the IR radiation. So, it will turn off the webcam. By this, it will reduce the power consumption and memory consumption in the cloud.

S.NO	Age group	Normal body temperature	Fever body temperature
1	(0-1)month	32.4	36
2	(1-3)month	34.8	38
3	3m- 3year	36	39
4	>3year	37	40

Sound Sensor:

LM393 microphone sound sensor is used to detect any audio around the surroundings. A sound sensor will detect the sound intensity. It will generate an alarm, if the sound intensity is

above a certain threshold. The microphone sensitive range is about (52-48) db. The signal to noise ratio (SNR) is 54db. Sound sensor (LM393) produces both analog and digital output. The raspberry pi does not support analog signal, the digital output is directly connected to the Raspberry pi to eliminate the ADC convertor. The positive pin is connected to the 5V power supply and the negative pin is grounded. The digital output pin is directly connected to the USB port in Pi. The sound sensor detects the cry sound of the infant continuously and sends a digital output to the Pi. If the digital value exceeds the threshold value, it will generate an alarm in the cradle.

Camera:

Camera module is used to capture the picture and the video of the surroundings. The Raspberry pi camera V1 module is used in the proposed model. It is capable to store 2592 * 1944 pixel image and also supports to capture 640*480 pixel video. The pixel range of camera module V1 is 5 mega pixel. The focal length is 3.6mm. This camera works with all the models of Raspberry pi. The camera is directly interfaced with Raspberry pi. In the proposed system, the camera module is placed in the cradle. The camera is turned ON, when the PIR sensor detects the IR radiation. After that, it captures all the movements of infant in the cradle. It will be stored in the cloud for future purpose. The stored video in the camera be viewed by the doctors after the authentication from the parents. With this the proposed system helps to reduce the mortality of the infants due to SIDS.

Raspberry pi:

Raspberry Pi is a series of credit card sized single computer. It has ability to do many task as the computer. It is used in many applications like games, word processing and automation. It provides a set of GPIO (General Purpose Input Output) pins that allows controlling electronic computers and it is a very cheap computer. The Raspberry pi is of two models, they are Model A and Model B. The difference between model A and model B is USB port. Model B contain Ethernet port but Model A doesn't have it. It also comprises of memory (RAM), processor, GPIO and the SD flash memory card and the WIFI adaptor. In SIDS prevention, Pi is used to automate the cradle. The Raspberry Pi 3 (Model B) is used here for the advancement. The automation is done by using Python language. The information from all the sensors is sent to the Raspberry Pi. If the actual value from the sensor which is cast onto the Raspberry pi exceeds the threshold value, it will generate the SMS and send to the parents or guardian. With this, the proposed system reduces the death of infants due to SIDS.

GSM module:

GSM module is digital cellular technology. It is a chip which is used to establish communication between a mobile device and the microcontroller or computer. It is also used for transmitting mobile voice and the data service. It operates at the frequency bands of 850 MHz, 900 MHz, 1800 MHz and 1900 MHz. GSM uses a Time Division Multiple Access (TDMA) technology for communication. It consists of mobile station, base station module and the network subsystem. It provides SMS, high quality speech. It also provides encryption to give more security. In the proposed system, we use GSM module to send an SMS to the parents or guardian of the infants. GSM module is powered by 5V from the Raspberry pi. The transmitter pin in GSM module is connected to receiver of Pi and the receiver pin in GSM module is connected to transmitter pin in Pi. After that, threshold value in Pi is compared with the actual value from the connected

sensor. If the actual value exceeds the threshold value, Pi will send an information to the GSM module. The GSM module sends an SMS to the parents mobile to indicate the infant movement, according to the program. With this, we can control the mortality of the infant.

Cloud technology:

Cloud computing is an operating technology. It has a large file storage and backup facility. In the proposed system, we use a cloud technology along with machine learning algorithm. The cloud technology is used to store the video of the infant which is captured by webcam in Raspberry pi. Machine learning algorithm is used to analyze the input data to predict output values. The webcam captures the movement of the infant and it is stored in the cloud. The Homo-morphic algorithm is used to provide the security. It is an encryption algorithm and provides remarkable computation facility for encrypting data and return encryption result. It solves security and confidential issues. It solves the threat while transferring data between the doctor and parents. It hides plain text from service provider and operates only on cipher text. After receiving an SMS and getting the authentication from parents, the video in the cloud is verified. According to the movement of infants, the first aid to the parents is informed through phone.

Result:

By this project the belt has a capacity to monitor different parameters. The parameters are sent to mobile app through Bluetooth. The values are then sent to cloud .all the parameters can be retrieved to mobile app through which the doctors and caretakers can look after that parameters and can keep the track on baby health.

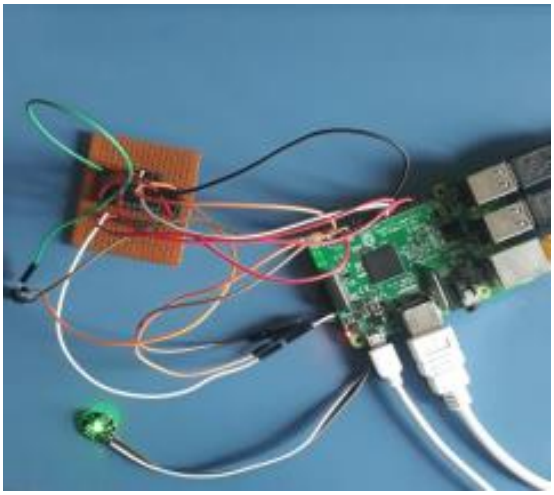

Connection of proposed system
(missing connection of Bluetooth**)**

Conclusion:

SIDS using IOT is designed to prevent the increasing death rate among infants by measuring the temperature, pressure and detecting the cry of the infant. The camera and PIR sensor is placed on the cradle. When the baby is present in the cradle, the PIR sensor will detect the infant and will start the camera. The temperature sensor senses the temperature. If the temperature exceeds the threshold of temperature 36 degree Celsius, it will send an SMS to the parents or guardian. The heart beat sensor measures the BPM. If the pulse rate exceeds the threshold of 150 BPM, it will send an SMS to parents or guardian. The camera continuously captures the video and it will be stored in the cloud. After getting the authentication from parents, the doctor could see the video in the cloud. It mainly tells whether baby sleeping in correct position or wrong position. By this, the doctor would identify the problem of the infant and will send the first-aid information to the parents/caretaker in the vicinity. With this proposed system, mortality of the infants due to SIDS can be greatly reduced.

REFERENCES:

[1] Waheb A. Jabbar, Saidatul N. I. S. Hamid, Akram A. Almohammedi , Roshahliza M. Ramli, And Mohammed A. H. Ali - "IoT-BBMS: Internet of Things-Based Baby Monitoring System for Smart Cradle"- IEEE - Volume 7, July - 2019.

[2] Mohsina Mohamed Kabeer, Nedheela N Nazar, Navami Krishna U A, Nighila Ashok and Shasna M A - "Infant Cradle Monitoring System using IOT" – IJARCCE – Volume 8, April – 2018.

[3] Kyle Takeuchi, Dr. Tokunbo Ogunfunmi, Shivakumar Mathapathi and Xiaoting LIU – "Video based baby monitoring SIDS prevention" – IEEE –2017.

[4] Mohit Kumar, Mrs.Suryakala - "Temperature control and monitoring of incubator using IOT" – IJETCSE – Volume 12-Issue 1 – May 2016.

[5] Aaishwarya Jadhav, Mr. Gaurav Khadse, Jaikumar Ambekar, Kranti Dive, Shubham Wadzirkar, Mr. Sonit Sharma and Divya Venkatramani – "Infant Monitoring using wearable monitoring" – IJETR –Volume 3, Issue 11, 2015.

[6] Savita P. Patil and Manisha R. Mhetre – "Intelligent Baby Monitoring" –ITSI-TEEE- Volume 2, Issue 1, 2014.

Theft Detection and Protection of Vehicle using Facial Recognition and IOT in Real Time

[1]Nanthini. M, [2]Veni. K, [3]Mrs.Chandrika. R

[1,2] UG students, B.E-Department of Electronics and Communication Engineering, Sardar Raja Collage of Engineering, Alangulam, Tirunelveli, Tamil Nadu, India
[3] Assistant Professor, Department of Electronics and Communication Engineering, Sardar Raja Collage of Engineering, Alangulam, Tirunelveli, Tamil Nadu, India

Abstract - Enhancement in vehicle technology system is getting increased by adding a vehicle theft security system in order to avoid getting vehicle theft in the parking and sometimes driving in unsecured places. The proposed system provides security and better theft control by using facial recognition. when the unauthorized person try to start the ignition and will benotified by the IOT application. This system is very simple with greater security for vehicle anti –theft protection and low cost technique compared to others.

INTRODUCTION

The use of vehicle becomes important everywhere in the world and also preventing it from theft is required. Vehicle manufacturers are attaining the security features of their products by introducing advanced automated technologies to avoid the thefts particularly in case of cars. Biometric and non-biometric methods usually provide such security features. Face recognition and detection is the biometric used in our project. Providing high security to the vehicle to avoid theft by using facial recognition with the help of data stored in the laptop and alert him with a message. This total system is operated with hardware and software. There are many features (both safety and security). The recognized image is compared with the authorized image of users in the database. If matched, the system allows to operate the vehicle. If not matched, its ends MMS and image of the person to the owner. The system uses a WIFI controller installed in the vehicle. The implemented system is very simple with greater security for vehicle anti - theft protection.

LITERATURE SURVEY:

Amritha Nag , Nikhilendra J N and MrutyunjayKalmathg(Dept of Embedded system) sense, VIT university.their existing a system with the IOT based and describe about a reliable traditional security system using a Raspberry pi under image capture, face detection and recognition. The system was programmed by PHYTON and programming language Both real time face recognition from specific images.

Poushya , k. Rup sari, N.Supritha ,K.Hema and R.Tejaswini (Electronics and Communication Engineering)VVIT,AP. they describe about the mechanism of vehicle to avoid theft and send the notification through IOT application ,when the unauthorized person try to start the vehicle and simultaneously it track the location regularly.

Prof K..T. Jadhao and Prashanth Balraj Balla(Electronics and Telecommunication Engineering)ARIET, Thane,Maharashtra. They implement the system with IOT for the particular face with real time variations by using facial recognition[3].

Prabal Deep Das and Sharmila Sengupta (Electronics and Telecommunication Engineering) VSIET, Mumbai. Are proposed a system with MATLAB. Which provide security to the vehicle prevent from the accident under the safety andsecurity using Bluetooth module, camera and sensors avoiding the occurrence of collision as well as the accident control.

S.Padmariya and Esther Annlin KalaJames (Department of Production Technology) Madras institute of Technology,Anna university ,Chennai. it gives the information of human face color , To detect whether the object facing towards the camera is face or any other object by using an algorithm name as adboost algorithm. This can be done by converting weak classifier into high classifier.

PROBLEM FINDING:

Old technology for facial recognition was done with the help of data stored in the default program. Now, it is changed to approval from the owner at the time of entering the car.

PROPOSED WORK:

which can be utilized in many cars .our system uses facial recognition to identify the authorized users of the vehicle .only authorized users allowed to use the vehicle .In this system we are designing facial recognition algorithm which will identify the driving person based on which the vehicle ignition can be controlled .proposed system provides enough security in terms of vehicle theft happening and the ignition is only controlled by the facial recognition .proposed system having a cost efficiently an easy to be implement in the existing vehicles .if an unauthorized user tries to use the cars ,the system scan the person's face and check whether face matches with the authorized face .if it is does not match then it is proceed with IOT notification.

BLOCK DIAGRAM:

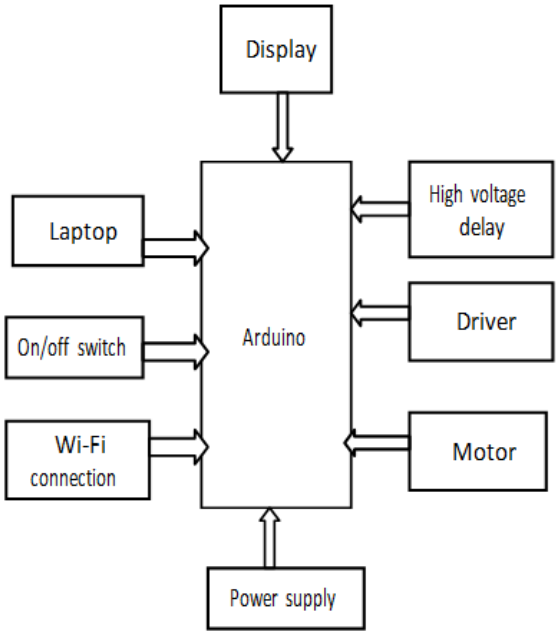

FLOW CHART:

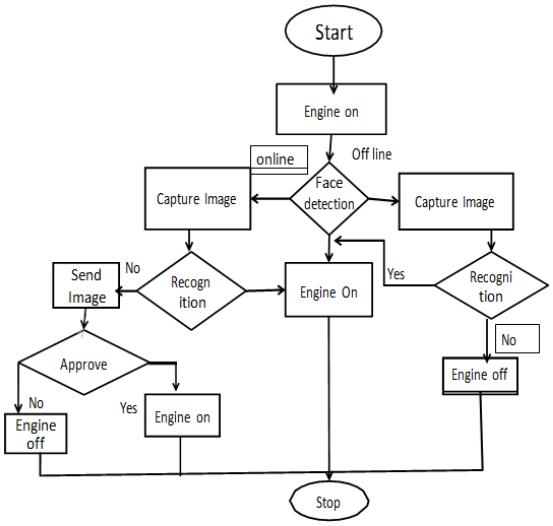

WORKING:

In this system we are designing facial recognition algorithm which will identify the driving person . The authorized users of the vehicle are already stored by the recognition. If any unauthorized person try to start the vehicle an alert ,message and the person's image is sent to the owner. If the owner allows driving, the car engine gets started. If the owner declines the message then a minute

shock is provided to the non-authorized person. If the owner does not respond to the message then engine does not start.

REFERENCES:

[1] Amritha Nag,Nikhilendrao J N,Mrutyunjay Kalmath, "IOT Based Door Access Control Using Face Recognition",2018 3rd International Conference for Convergence in Technology (I2CT), pp 1-3

[2] M. Poushya, k. Rupasari, N.Supritha, K.Hema and R.Tejaswini, " IOT Based Vehicle Theft Detection ",20 18 IRE Journals, Electronics and Communication Engineering (ECE),Vasireddy Venkatadari Institute of Technology, pp 52-55.

[3] Prof .K.T . Jadhao and Prashanth Balraj Balla " ,IOT Based Facial Recognition Security system",2018 Alamuri Ratnamala Institute of Engineering and Technology (ARIET) pp 1-4.

[4] Prabal Deep Das, Sharmila Sengupta, "Proposing the systems to provide protection of vehicles against theft and accident",2016 IEEE Conference On Recent T rends In ElectronicsInformation Communication Technology", pp 1681-1685.

[5] S.Padmapriya & Esther Annlin KalaJames, "Real Time Smart Security System Using Face Detection and Recognition",2012 International Conference on Computer Communication and Informatics (ICCI-2012) , pp 1-6.

[6] Website about the raspberry pi power supply [online]Available:https://magpi.raspberrypi.org/art icles/power-supply.

[7] website about the Raspberry-Pi 3 B+ and related topics . [Online]. Available: h t t p s://www. r a sp be r ry pi. or g/pr o duc t s/r a sp be r r y - p i- 3 - m o de l- b- p lus/.

[8] website about Pi Camera [online] Availablehttps://wiki.eprolabs.com/index.php?tit le=Raspberry_Pi_Camera_Module.

[9] website about door locking system[online] Available: h t t p s://www. sc ie nceabc.com/innovation/abs-sensors-anti-lock- breaking- system-technology-cars-work.html

[10] MEMS Sensor [online] Available:https://images.app.goo.gl/wSbV2Xbz 8k5GrgKN7. buzzer [online] Available:https://en.wikipedia.org/wiki/Buzzer.

[12] DC motor [online] Available : https://en.wikipedia.org/wiki/DC_motor-cars-work.html .

OR Police: Discovery, Blocking and Traceback Anonymous Communication from Attacker in the Tor Networks

[1]C.jayasri, [2]K.Reshma, [3]K.P.Priyadharshini

[1,2,3] B.E Computer science And Engineering, MRK Institute Of Technology, Kattumannarkoil, Cuddalore, India

Abstract - The Onion Router (Tor) is one of the significant organization frameworks that give mysterious correspondence and restriction circumvention. Peak empowers its clients to ride the Internet, talk, and send messages namelessly; be that as it may, digital assailants additionally misuse the framework for dodging crime identification. As of late, different methodologies that forestall or moderate maltreatment of Tor have been proposed in the writing. This paper, which presents one of the methodologies, addresses an IP traceback issue. In our model, onion switches that deliberately take an interest in assailant following recognize assault bundles (parcels conveying an assailant's code or information) recorded in the log les by offering essential data to an assaulted worker over an Ethereum block chain network. The discovery calculation in this paper utilizes the insights of parcel travel furthermore, transfer times and yields assault parcel competitors. The proposed strategy appends a dependability degree to every competitor, which depends on the upper limits of its Type I and II blunder rates. A savvy contract running on the block chain network positions the discovery results from onion switches as per the unwavering quality degrees.

Index Term: IP traceback, Network Security

INTRODUCTION

The Onion Router (Tor) is a widely used overlay net work that provide low -latency anonymous communication for transmision control protocal (TCP) Application and helps circument various censorship measures .According to Tor metrics The Network Currently consist of More than 6000 onion routers has millions of directly connecting user and carries hundreds of Gbit/s tor ,however has been abused by illegal servies such as infamous Silk Road And the crypto locker ransomware command and control (c&c) server .It was a reporter in that some onion Router are malicious and perform man in the middle(MINTM) structured query language SQL injection and cross site scripting (XSS) attacks .

Recently various approches to maintain the health of the Tor network machine in conjunction with the attacked servers. We expect that successful investigations enabled by our scheme will be a strong deterrent to attacks even if it is only partially deployed in the Tor network. IP traceback problems have been intensively studied, in particular for countering denialof-service (DoS) and distributed denial-of-service (DDoS) attacks [12]. However, to the best of our knowledge, in no papers, has a means of detecting the actual attack source in the Tor network been discussed. According to [13], the majority of Tor research has been devoted to deanonymization, the design of a breaching strategy. Deanonymization based on traffic analysis is somewhat similar to our approach. From the perspective of attackers, the objective of deanonymization is to maximize the success rate of linking a source and a destination of any communication. Based on the perspective of a criminal investigation, our approach logically narrows down the candidates for attack packets, packets carrying the attacker’s code or data, based on the evidence remaining on the victim server. Thus, our approach may not detect a single candidate

but it does significantly decrease the detection error rates. The premise of our approach is different from that of traffic analysis-based

IMPLEMENTATION

A. TOR Tor is a low-latency anonymity network based on a concept called onion routing, which operates as follows. A client who installs an onion proxy, an interface between a client and the Tor network, downloads onion router information from a directory server and chooses three routers to establish a circuit. The first, second, and third routers are known as the entry, middle, and exit routers, respectively. Packets from the client to a server pass through the circuit.

B. ETHEREUM Ethereum is the second-largest cryptocurrency platform on which users broadcast transactions (data packets signed with their private keys). Ethereum and Bitcoin [16] are similar in that peer-to-peer (P2P) technology maintains a blockchain, a growing list of transaction records that are linked using cryptography, through the competition of solving computationally intensive problems. While Bitcoin blockchains are concerned only with transactions between user wallets, Ethereum blockchains present decentralized computing environments called Ethereum Virtual Machines (EVMs), on which smart contracts (stateful decentralized applications) can run. Two types of accounts exist in Ethereum: user accounts controlled by users and contract accounts controlled by smart contracts. Smart contracts behave in the same man autonomous agent.

MODULES:

1. TOR NETWORK
2. CLIENT SERVERF INTERACTION
3. HACKER MODEL
4. LOG FILE GENERATION
5. IP TRACEBACK
6. DETECT ATTACKERS

CONCLUSION

We have up to this point examined methods for recognizing assailants' parcels that might be recorded in an onion switch's log le with sufciently low mistake rates and without trading off Tor clients' security.

Our methodology was to limit the identification blunder rates as opposed to boost the recognition achievement rate.

Subsequently, our methodology may not yield a solitary up-and-comer.The thoughts introduced in this paper were as per the following.

(1) Attacked workers and cooperators, i.e., switches that intentionally consent to follow assailants, structure an Ethereum organization, wherein open furthermore, sealed blockchain advances forestall the duplicating of proof les and permit Ethereum members to screen the following cycles of all episodes completely.

REFERENCES:

[1] R. Dingledine, N. Mathewson, S. Murdoch, and P. Syverson, ``Tor: The second-generation onion router (2014 DRAFT v1)," Cl. Cam. Ac. Uk, 2014.

[2] T. T. Project. (2020). Tor Metrics. [Online]. Available: https://metrics. torproject.org/

[3] M. Casenove and A. Miraglia, ``Botnet over tor: The illusion of hiding," in Proc. 6th Int. Conf. Cyber Conict, Jun. 2014, pp. 273282.

[4] A. Sanatinia and G. Noubir, ``OnionBots: Subverting privacy infrastructure for cyber attacks," in Proc. 45th Annu. IEEE/IFIP Int. Conf. Dependable Syst. Netw., Jun. 2015, pp. 6980.

[5] N. Christin, ``Traveling the silk road: A measurement analysis of a large anonymous online marketplace," in Proc. 22nd Int. Conf. World Wide Web, 2013, pp. 213224.

[6] D. Gonzalez and T. Hayajneh, ``Detection and prevention of cryptoransomware," in Proc. IEEE 8th Annu. Ubiquitous Comput., Electron. Mobile Commun. Conf. (UEMCON), Oct. 2017, pp. 472478.

[7] A. Sanatinia and G. Noubir, ``Honions: Towards detection and identication of misbehaving tor hsdirs," in Proc. Workshop Hot Topics Privacy Enhancing Technol.

(HotPETs), 2016, pp.
[8] N. Hopper, ‘‘Protecting Tor from Botnet abuse in the long term,’’The Tor Project, Seattle, WA, USA, Tech. Rep. 2013–11-001, 2013
[9] Z. Ling, J. Luo, K. Wu, W. Yu, and X. Fu, ‘‘Torward: Discovery, blocking, and traceback of malicious traffic over tor,’’ IEEE Trans. Inf. Forensics Security, vol. 10, no. 12, pp. 2515–2530, 2015.
[10] Z. Liu, Y. Liu, P. Winter, P. Mittal, and Y.-C. Hu, ‘‘TorPolice: Towards enforcing service-defined access policies for anonymous communication in the tor network,’’ in Proc. IEEE 25th Int. Conf. Netw. Protocols (ICNP), Oct. 2017, pp. 1–10.] 11)
[11] Z. Yao, J. Ge, Y. Wu, X. Zhang, Q. Li, L. Zhang, and Z. Zou, ‘‘Meek-based tor traffic identification with hidden Markov model,’’ in Proc. IEEE 20th Int. Conf. High Perform. Comput. Commun., Jun. 2018, pp. 335–340.
[12] B. Cusack, Z. Tian, and A. K. Kyaw, ‘‘Identifying dos and ddos attack origin: Ip traceback methods comparison and evaluation for iot,’’ in Interoperability, Safety and Security in IoT. Cham, Switzerland: Springer, 2016,

Physiological and Environmental Parameter Healthcare Monitoring System Using Internet of Things

[1]P.Vinothkumar, [2]M.Indhumathi, [3]A.Mathivanan, [4]S.T.R.Mohanapriyan, [5]T.Pavithra

[1] Associate Professor, Department of Electronics and Communication Engineering, Nandha College of Technology, Perundurai, Tamilnadu, India
[2,3,4,5] UG Students-Final Year, Department of Electronics and Communication Engineering, Nandha College of Technology, Perundurai, Tamilnadu,India

Abstract - This is to analyze the physiological and environmental monitoring of human health care. We develop flexible IoT gateway that can adopt different commercial product for measuring. In such a way different users/patients owing products can use this solution. Platform is not restricted to only specific vendors. In personalized healthcare monitoring, wearable are playing in important role in terms of data measurement collection. Hence we develop an innovative wrist-worn prototype for ambient monitoring and flexible IoT gateway .The prototype measures the most critical parameter from an ambient domain. Therefore depending on the target investigation, status of the patients, requirements and demands, medics can determine the setup parameter for measurements. Thus the application of this platform is not limited to specific groups but widely may be applied whether in daily routine or medical research investigation.

Index Term: IoT healthcare, ambient parameters, flexible IoT gateway, physiological parameters, wearable devices

INTRODUCTION

The main focus of this heath care is to gradually shifting from traditions methodology to health protection by prevention and prediction. The Internet of Things has become one of the major communication Para diagram that is spreading over a different range of application and provide the possibility of centralized data accessibility and fusion. The promising experience with electronics health and mobile health the medical IoT is in the centre of interest in the new era of healthcare .Proposing an efficient solution within IoT by deploying WBAN in healthcare for environmental and physiological monitoring requires addressing numerous issues properly. The interconnection between the physiological and environmental indicators is the aspect in healthcare which requires data investigation and only can be demonstrated by means of data analysis through the suitable algorithm decisions from continuous monitoring of an individual. The impact could be varied for various parameters and requires a careful investigation and determining the internal/external players .In this atmosphere environmental measuring platform each device transmit a packet including the collected data as well as the location and operation status of the measuring device through the LTE network. This version of common sense measures multiple ambient air pollutants ,including CO,NO and O3 gas sensors as well as the sensors measuring light, temperature, relative humidity and body orientation. Data transmission from the prototype to the smart phone is realized through an integrated Bluetooth module from Spark Fun. The received data are visualized on a Smartphone and are sent to a host server by a GPRS ratio. These data are visualized and analyzed on the Web-Server as well.

METHODOLOGY

The presented healthcare IoT approach in this article focuses on a flexible mobile data collection system for preventive and occupationally monitoring of daily routine.

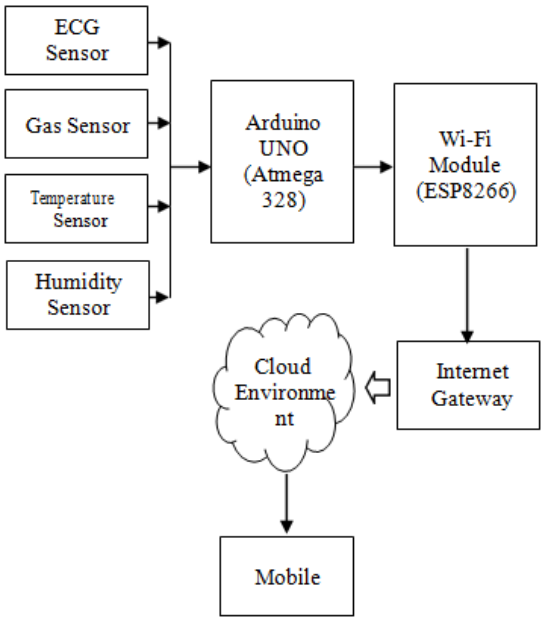

1. Blocked Diagram for Proposed System

Ubiq sense has been developed for comprehensive parameter monitoring in the environment applications .Toxic/hazardous gases, noise, UV, air temperature, humidity and pressure are included in the field of personalized ambient monitoring. The wearable in this approach must be convenient size and lightweight .The configurability of platform is supported via IoT gateway. From one side via the flexible, adoptable and configurable IoT gateway ,the differ sensor nodes, products and prototype are adapted into the platform and from the other side this IoT gateway gives the medics ,the flexibility of task definition and data set up via the sensor activation to support the end to end communication. The integration of such data includes Intra-inter-individual parameter and sensors aspects, which often require long-term investigation data, high level data fusion and analytics or the consideration of other study results.

Temperature and Humidity Sensor:

The Humidity and Temperature are the key ambient parameters which are directly cause the patient health conditions. Decrease in the temperature or increase in humidity directly impacts the patients and vice-versa. The Humidity and Temperature sensors are used to sense the change in atmospheric conditions. The DHT11 sensor is used to measure temperature and humidity value.

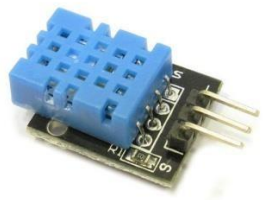

2. Temperature and Humidity Sensor

Gas Sensor:

Exposing of people suffering from heart diseases and cardiovascular to chemical air pollutants (Ex. CO, NO2, and smoke) can cause a serious degree of risk in breathing rate and heart failure depending on the period of exposure, concentration and the volume of the pollutants, and the health status of the patients. The atmospheric air quality is being measured to classify the air pollution. We used MQ135 gas sensor to detect the air pollution.

3. Gas Sensor

ECG Sensor:

The ECG sensing network is the foundation of the entire system, which is responsible for collecting physiological data from the body surface. Wearable ECG sensors are usually adopted in this system, which have little impact on the user's daily life. Through this means, ECG data can be recorded over long hours or even days. By measuring the ECG we can analyze the patient conditions.

All the sensor data are put together and the ambient and physiological parameters are identified for patients health monitoring.

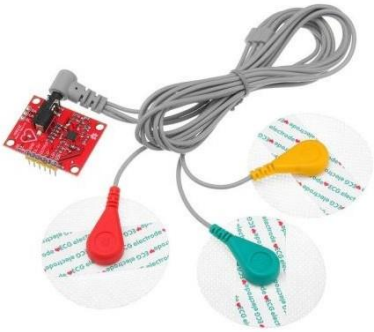

4. ECG Sensor

Arduino UNO Microcontroller Board:

The Arduino microcontroller board contains an Atmega328 microcontroller. It consists of 14 digital pins and 6 analog pins for input/output operations. The sensor module is connected directly with Arduino UNO. It measures the sensor readings and categorizes the ambient parameters (Temperature, Gas and Humidity) and physiological parameter (ECG). These measured values further uploaded in the cloud.

5. Arduino UNO Microcontroller Board

ESP8266 Wi-Fi module:

To upload the sensor data in a cloud environment we required and wired/wireless communication module. This module allows microcontrollers to connect to a Wi-Fi network and make simple TCP/IP connections with simple commends. It receives the sensor value through Arduino UNO and helps to upload to the cloud.

through the gateway. The strategy of data transmission avoids consuming power unnecessarily. The ambient physical parameter, including air pressure, temperature and humidity are transmitted in one packet as well, Noise, gas, UV are all transmitted in a separated packet with sequence number and packet ID, respectively.

Internet Gateway:

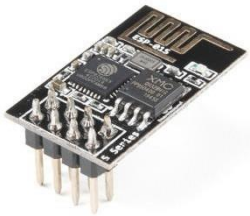

6. ESP8266 Wi-Fi module

INFORMATION MANAGEMENT AND COMMUNICATION

Every IoT gateway provides an individual, which consists

It gives connectivity support to the internet and acts as an intercommunication module to connect Wi-Fi and Cloud environment.

Cloud Environment:

All the collected sensor data will be gathered in Cloud Environment. In this work, we are using Thing Speak Open source cloud for collecting and analysing the sensor information. The ECG, Temperature, Humidity and Gas sensor values are received and viewed through graphically. Every sensor value will be uploaded with every 15 secs.

Further this data is viewed through the mobile app.

PHYSIOLOGICAL PARAMETER MONITORING

For the acquisition of the physiological parameters commercially available solutions are used. The web interface allows access to the user sensor system and it also allows a retrospective data request. However the compactness if the sensors combined with a wide range of provided data are very comfortable for investigation in the field especially for the patients or subjects. This includes the selection of parameters to be transferred and the defined limit values which results in indication messages by transgression. The selection of sensor solutions represents a competitive as well as a complementary sensor system configuration which allows increasing the fault tolerance and the range of information.

ENVIRONMENTAL PARAMETER MONITORING

It is measured as indoor and outdoor air quality which in each different parameter is considered for measurement. In chemical pollutants toxic and hazardous gases and the physical parameter, UV index and noise but air pressure, humidity and temperature are of concern. Mode of wearability, multiparameter monitoring, prolonged monitoring, modular hardware, efficient data transmission, device flexibility and convenience are the most remarkable highlights in wearable sensor and technologies to be considered.

DATA TRANSMISSION TO IOT GATEWAY

The collected data are transmitted to the IoT cloud of all the required sensor configurations and options access and call back URLs, tokens, IDs, parameter, priorities and access limits. After receiving the investigation relevant information the IoT gateway tries to establish a connection to the required and declared data sources.

- Short range communication – for the sensor gateway communication Bluetooth/BLE used.
- Mobile Internet communication – for the communication between the gateway and the involved cloud solutions WLAN, G3 and higher is used

Usually the configuration options are offered by the sensor nodes, which support comprehensive scopes of the parameter. The data collected from the different sources are prepared by the IoT gateway regarding the reformatting, possible pre- processing and the data synchronization. Our solution supports the data compression as well.

EXISTING SYSTEM

In large scale and gender perspective the effective parameter from behavioural ambient and physiological domains are the most influencing fields of interest in healthcare monitoring. In this platform via IoT gateway as an intermediate have between the wearable and IoT server bidirectional communication between the end user and matrix is established in real-time. In addition the physician as a real time observer of patients are given the possibility to set up the required parameter for measurement the IoT gateway and sensors

PROPOSED SYSTEM

The user and the authorized personnel might be able to access data depending on the task definition for each individual. IoT can connect number of sensors vehicle house and appliances together to the internet which allows a user to share data information and resources. We combine synchronize and process the physiological and ambient and parameter for the medical investigation on the

parameter interactions. The flexible IoT gateway that has developed can adopt different commercial products for measuring the physiological parameter.

RESULTS

We aim at prolonged and pervasive parameters monitoring with convenient modes of wearability in personalised health care. The flexible IoT gateway has been implemented for the mutual contributions to user and medics. This methodology can be applied in working environments especially in areas where people are exposed to hazardous conditions that might endanger their lives. However we aim at supporting the technical applicability, approach and methodologies evaluation, specifications, proof of concept and implementation of the solution rather than clinical investigation.

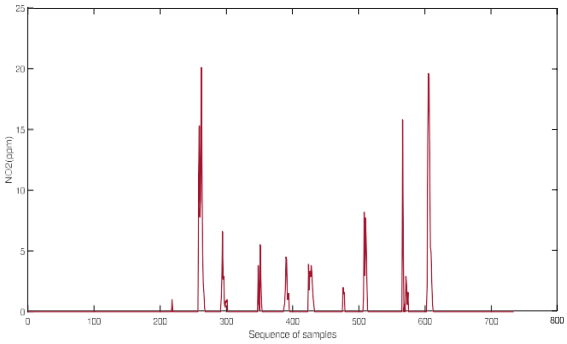

7. NO2 Analysis

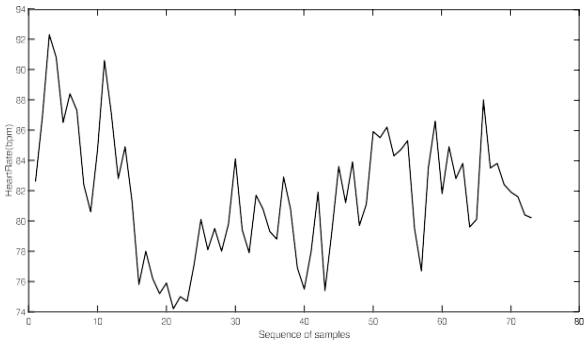

8. Heart Rate Analysis

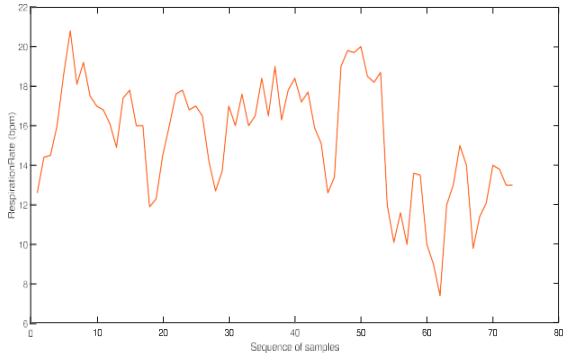

9. Respiratory Analysis

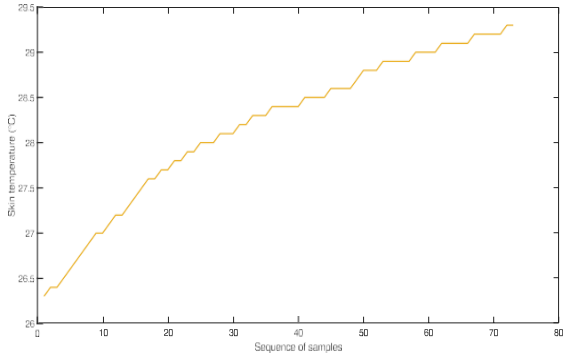

10.Temperature Analysis

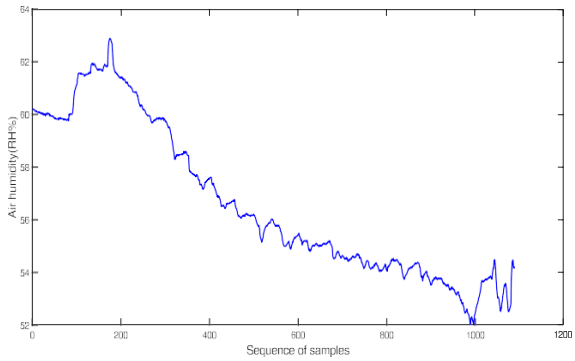

11.Air Humidity Analysis

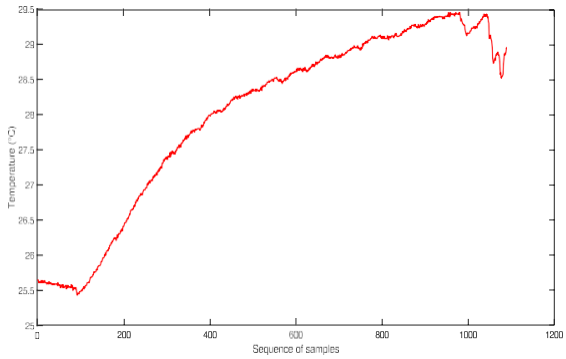

12.Skin Temperature Analysis

CONCLUSION

An IoT gateway as an intermediate hub between the physical layer and the server has been developed for data collection and synchronization to facilitate an efficient and to end communication between the user and the medic in real time. From one side the smart phone as the IoT gateway supports the physician to define tasks, configure the wearable, select the required parameter for measurements and specify the activation/deactivation sensor period and form the other side the user is not restricted to some specific vendors. In future work, we aim at the application extension and further clinical investigation.

REFERENCES:

[1] Y.Yang, L.Wu, G.Yin, L.Li and H.Zhao, "A survey on security and privacy issues in Internet-of-Things," IEEE Internet things j., vol.4, no.5, pp 1250-1258, OCT, 2017.

[2] L.Cerina, S.Notargiacomo, M.G.Paccanit and M.D.Samtambrogio, "A fog-computing architecture for preventive healthcare and assisted living in smart ambient" in Proc.IEEE 3rd Int.Forum Res. Tecnol.Soc. Ind. (RTSL).Modena, Italy, 2017, pp 1-6.

[3] N.Castell et al., "Can commercial low-cost sensor platform contribute to air quality monitoring and exposure estimates."Environ. It., vol.99, pp.293-302, Feb 2017.

[4] M.Saad et al., "Study on the effect of the ambient temperature toward the quality of sleep." Int. J.Elect. Comput. Eng.(2088-8708), vol.7,no.1, pp.2986- 2992,2017

[5] Y.C.Chen, "A RFID-based intelligent home healthcare system for chronic disease management." in. Proc. IEEE 11th Consum. Commun. Netu: Conf. (CCNC), Las Vegas, NV, USA, Jan 2014.

Prevention of Shutdown Bugs in Cloud Using AI Based IP validation

[1]U.Santhiya, [2]N.Subhavadhana, [3]M.Vinitha

[1,2,3] Computer Science and Engineering, MRK Institute of Technology,kattumannar koil, Tamilnadu

Abstract - CLOUD computing enables cloud customers to rent resources (e.g., virtual machines (VMs)) on as-needed basis to run their applications.We propose a novel solution to automatically find these bugs and locate their causes in the sourcecode.Our scheme exploits the homomorphic encryption and bilinear map to determine the location relationship of multiple queried keywords over encrypted data. It also utilizes a probabilistic trapdoor generation algorithm to protect users' search patterns.Thorough security analysis demonstrates the security guarantees achieved by Proposed system.

INTRODUCTION

CLOUD computing enables cloud customers to rent resources (e.g., virtual machines (VMs)) on as-needed basis to run their applications. That is, cloud customers do not have to buy and host expensive hardware to run their applications,and instead they rent resources for their applications from cloud computing facilities. This is an essential difference between cloud computing systems and distributed systems,which require application owners to buy and host expensivehardware to run their applications. As the deployment cost isan integral part of applications deployed on the cloud, the cost-efficiency of provisioning resource to these applications becomes a priority, and it is of growing significance, since the total spending that will be affected by cloud computing is over $1 trillion by 2020 [1]. Many cloud providers such as Amazon Web Services offerfour types of instances (i.e., VMs) [2]: on-demand, reserved,dedicated, and spot (also known as preemptible). Cloud cus-tomers can pay for renting on-demand instances per hourwithout long-term commitments, and they cost the most.

Also, they can rent reserved instances for a long term by making an upfront payment to cloud providers and thus pay amuch lower rate than on-demand instances. A variation of reserved instances is a dedicated host, which is a physical server that is assigned only to a specific customer, and nobody besides this customer can use the resources of this host. Unlike the fixed-cost paying schemes mentioned above, a variable-cost paying scheme allows cloud customers to specify the price they are willing to pay for renting a spot instance to run their applications [2], and, depending on the varying demand from cloud customers, the price of this spot instance can go up if the demand increases and the number of available instances that can be supported by a finite number of physical resources in a data center of cloud providers decreases [3].

Conversely, the price of this spot instance can go down if the demand decreases and the number of available instances increases. If the customer’s price isgreater than the cloud provider’s price that depends on the demand, a spot instance will be provisioned to customers’ applications at the customer’s price. However, when spot instances are already provisioned to customer applications and the cloud provider’s price goes above the customer’s price, the cloud providers will revoke those spot instances within two minutes by sending termination signals, thus resulting in revocations of those spot instances [3], whose

occurrences are very difficult to predict [4]. As a result, even though cloud customers sometimes rent spot instances at 90 percent lower costs compared to ondemand [2], their applications that run in spot instances can be terminated based on price fluctuations that happen frequently, thus these applications may switch to an incorrect state leading to certain bugs [5], [6].

We address a new and challenging problem for cloudbased applications that results from irregular terminations due to spot instance revocations.

To the best of our knowledge, T-BASIR is the firstautomated solution to find bugs of applications resulting from cloud spot instance revocations.

We evaluate T-BASIR using 10 popular open-source applications. Our results show that T-BASIR not only finds more instances and different types of BASIR (e.g.,performance bottlenecks, data loss, locked resources,and applications that cannot restart) compared to the random approach, but it also locates the causes of BASIR to help developers improve the design of the shutdown process for cloud-based applications duringtheir testing.

T-BASIR's code and our experimental results arepublicly available [10], [1].

A preliminary version of these results appears in [2].

DEVELOPMENT

There are two primary sources of BASIR. The first one is spot instance revocations. The other one is shutdown bugs of cloud-based applications.

A.Spot Instance Revocations:

The revocations of spot instances are based on price fluctuations that happen based on demand of spot instances from many cloud customers. The cloud providers often revoke spot instances when the demand increases and the number of available spot instances that can be supported by a finite number of physical resources in a data center of cloud providers decreases. It is very difficult to determine in advance spot instance revocations that depend on the varying demands of cloud customers [4]. Doing so requires cloud customers (i.e., application's owners) to understand how the demands of the spot instances change, how the costs of the allocated spot instances change, and how to make tradeoffs between the demands and these costs [1]. As a result,price fluctuations that depend on the demand have a high influence on the number of spot instance revocations.

B.Shutdown Bugs of Cloud-Based Applications:

The shutdown bugs of applications often result from errors in the implementation of a cleanup process of these applications that occurs only during their shutdowns. The shutdown sequence of an application is often left untested because developers often assume that an application is properly terminated as long as its processes are terminated.

Developers often depend on the assumption that the operating system cleans the process space to a certain extent in anycase. Also, specifications describing the shutdown process of an application and which states are incorrect are rarely documented. Unfortunately, existing bug finding tools (e.g.,PMD [9] and FindBugs [2]) are not applicable to BASIR because they rely on searching through the application's execution paths for certain inputs to check if the state value of an application varies from the expected value that represents the input value of the next instruction in this execution path. However, a termination signal can be initiated at every execution state of applications, leading to a significantly larger search space of these states. On top of that, the

shutdown sequence of an application varies based on thetype of termination signals [9].

RELATED WORK

In this section, we discuss the related work concerning spot instance revocations and application bugs.

A.Spot Instance Revocations:

To the best of our knowledge, T-BASIR is the first automated solution for testing the effect of spot instance revocations on cloud-based applications. Most of the prior works focused on reducing the effect of spot instance revocations using faulttolerance methods, such as replication [3], [5], [8], check pointing [1], [2], [5], and VM migration [7], [9].

B.Application Bugs:

T-BASIR is the first automated solution to identify instances of BASIR. T-BASIR measures the impact on the state of RAT when the application is irregularly terminated to identify BASIR, as discussed in Section 4.3. Existing bug finding tools are not applicable to BASIR because they rely on searching through the application's execution paths for certain inputs to check if the state value of an application varies from the expected value that represents the input value of the next instruction in this execution path. However, a termination signal can be initiated at every execution state of applications, leading to a significantly larger search space of these states. Prior works required users to provide the buggy templates in order to find application bugs [6], [9],[2], whereas other works automatically inferred rules and specifications by mining existing applications in order to find application bugs [7], [3].

IMPLEMENTATION

we propose a novel solution to automatically find BASIR and locate their causes in the source code of cloud-based applications.We develop our solution for Testing for BASIR (T-BASIR) that uses kernel modules (KMs) to find these bugs and generate traces of their causes in the source code And we are applying the encryption to our cloud and we are changing the public key into final trapdoor so that unwanted person can know the key for the data.

In T-Basir our Terminator KM,specifies when we send a termination signal during the execution of cloud based applications that mimics the irregular terminations.

Given that BASIR are more likely to be exposed when instructions use resources to perform certain operations that are often accessed when specific system calls are invoked.

Our Terminator KM sends a termination signal during the execution of these systems calls, which corresponds to specific instructions in source code.In summary,our Terminator KM sends termination signals only during the execution of these instructions to increase the degree of precision for finding BASIR.

Overview of the T-BASIR tracer.

V.CONCLUSION

We addressed a new and challenging problem for cloudbased applications that results from spot instance revocations. We proposed a novel solution to automatically findBugs of cloud-based Applications that result from Spot instance Revocations (BASIR) and to locate their causes in the source code. We developed our solution for Testing the BASIR (T-BASIR), and we evaluated it using 10 popular open-source applications. The results show that T-BASIR finds more instances of BASIR and different types of BASIR,such as performance bottlenecks, data loss and locked

resources, and applications that cannot restart, compared to the Random approach. With T-BASIR, developers can analyze the traces of BASIR to improve the design of the shutdown process for cloud-based applications during their testing and, hence, to gain the advantage of cloud spot instances in the cloud. This enables stakeholders to economically deploy their applications on the cloud spot instances.To the best of our knowledge, T-BASIR is the first automated solution to find bugs of cloud-based applications resulting from spot instance revocations.

REFERENCES:

[1] A. Alourani, M. A. N. Bikas, and M. Grechanik, "Search-based stress testing the elastic resource provisioning for cloud-based applications," in Proc. 10th Int. Symp. Search-Based Softw. Eng.,2018, pp. 149–165. [Online]. Available: https://doi.org/10.1007/978-3-319-99241-9_7

[2] P. Sharma, S. Lee, T. Guo, D. E. Irwin, and P. J. Shenoy, "SpotCheck:Designing a derivative IaaS cloud on the spot market," in Proc. 10th Eur. Conf. Comput. Syst., 2015, pp. 16:1–16:15. [Online]. Available:https://doi.org/10.1145/2741948.2741953

[3] B. Sharma, R. K. Thulasiram, P. Thulasiraman, and R. Buyya, "Clabacus: A risk-adjusted cloud resources pricing model usingfinancial option theory," IEEE Trans. Cloud Comput., vol. 3, no. 3,pp. 332–344, Third Quarter 2015.

[4] S. Shastri and D. E. Irwin, "Cloud index tracking: Enabling predictable costs in cloud spot markets," in Proc. ACM Symp. CloudComput., 2018, pp. 451–463. [Online]. Available: https://doi.org/10.1145/3267809.3267821

[5] J. Mohan, A. Martinez, S. Ponnapalli, P. Raju, and V. Chidambaram,"Finding crash-consistency bugs with bounded black-box crashtesting," in Proc. 13th USENIX Symp. Operating Syst. Des. Implementation, 2018, pp. 33–50. [Online]. Available: https://www.usenix.org/conference/osdi18/presentation/mohan

[6] A. Alourani, A. D. Kshemkalyani, and M. Grechanik, "Testing for bugs of cloud-based applications resulting from spot instance revocations," in Proc. 12th IEEE Int. Conf. Cloud Comput., 2019, pp. 243–250. [Online]. Available: https://doi.org/10.1109/CLOUD.2019.0005

[7] Y. Song, M. Zafer, and K.-W. Lee, "Optimal bidding in spotinstance market," in Proc. IEEE INFOCOM, 2012, pp. 190–198.

[8] R. Wolski, J. Brevik, R. Chard, and K. Chard, "Probabilistic guarantees of execution duration for amazon spot instances," in Proc. Int.Conf. High Perform. Comput. Netw. Storage Anal., 2017, Art. no. 18.

[9] W. Voorsluys and R. Buyya, "Reliable provisioning of spot instances for compute-intensive applications," in Proc. IEEE 26th Int.Conf. Adv. Inf. Netw. Appl., 2012, pp. 542–549.

[10] S. Subramanya, T. Guo, P. Sharma, D. E. Irwin, and P. J. Shenoy, "Spoton: A batch computing service for the spot market," in Proc.6th ACM Symp. Cloud Comput., 2015, pp. 329–341. [Online]. Available: https://doi.org/10.1145/2806777.2806851

Robotics of Conflict inside Multi-Partner Technology and Software Designing Programs

[1] S.Keerthika, [2]K.Pavithra, [3]P.Priya, [4]H.Shafrin

[1,2,3,4] Computer Science and Engineering, MRK Institute of Technology, Kattumannar Koil, Tamilnadu

Abstract - Large innovation and programming programs, for example, venture framework programs, are progressively actualized through a combination of client and expert outsider assets. These multi-accomplice working conditions can be considered as an unpredictable social framework, which intermittently experience different types of contention. This can be expected to contending targets and needs of the different associations, alongside incongruencies of colleagues inside the work-based informal organization of the usage program.

If not managed, struggle can prompt complex developing practices also, elements inside the more extensive informal community, which can seriously affect the probability of effective program execution of these product concentrated frameworks. Utilizing informal community examination and topical coding investigation inside a contextual analysis, we show that the undertaking the board of complex programming concentrated usage requires impressive spotlight on control and correspondence across the program-wide informal organization of colleagues, which we address as a robotic framework.

Index terms---Conflict, Cybernetics, Enterprise System, Software Engineering Project, Project and Programme Management

INTRODUCTION

Common knowledge within the technology and soft- ware engineering community that the majority of failures within large information system (IS) or information tech- nolgy (IT) programmes are not attributable to the technology, but rather the interactions between team members on the pro- gramme or constraints imposed by the end-user and imple- menting organizations involved [1]. In reality, this situation is frequently exacerbated by large technology and software engineering implementations oftentimes being outsourced to external software and professional service providers, where the individual third-party employees have different cultural and educational backgrounds, professional training and eti-quette, and cognitive aptitude, with respect to the in-house customer employees [2]. Indeed, it has been shown that the larger technology and engineering implementations are generally assembled into separate project teams who perform development activities in parallel to facilitate the efficient implementation of the programme [3]. At the larger scale, such as multi-party IT/IS programmes implemented across multiple geographic locations, there may be hundreds of team members involved, that are employed by both the customer and the various third-party organizations [4]. Whitty [5] has postulated that expansion in scale and complexity of these technology and software engineering implementations, causes them to display characteristics of complex systems. The behaviour(s) that emerge from these socio-technical systems, can be attributed to the complexity that arises through interactions between the large number of team members that come from a variety of employers, and whose individual professional and personal characteristics, may give rise to unforeseen social behaviours and dynamics. Moreover, due to the multi-party environment, the team members may have a set of objectives and priorities that align to the organizational

objectives of their specific employer, but that are in conflict with those from other employers; which may ultimately lead to programme-wide conflict, as recently shown by Williams [4]. As such, we believe that both the academic and professional communities who are interested in the development and propagation of conflict within large technology and software engineering programmes, will ben- efit from a new avenue of research that utilizes the concept of Cybernetics. The IEEE publications and conferences have a long his-tory of applied research and practice-based publications into software engineering project management (e.g. [6]), conflictpropagation within large technology and software engineer-ing programmes (e.g. [4]), and the cybernetics of complexsystems, such as: multicriteria decision-making in groups [7]; diffusion of information throughout social networks [8]; and the impact of implementers' actions on user resistance to IT implementation [9]. The field of cybernetics has exerted an influence on a diverse range of academic disciplines, including: artificial intelligence, biology, computer science, electrical engineering, management, and sociology. It has been defined in a number of ways, but all essentially relate to control of, and communication within, a complex system, be that engineered, living, or social [10]. Cybernetics has undergone three main periods of development, with: the initial period that focused on engineered systems spanning the mid-1940s to the mid-1970s, and being termed first- order cybernetics; the second period that focused on bio- logical systems spanning the mid-1970s to the mid-1990s, and being termed second-order cybernetics; and the third period that focused on social systems beginning in the mid- 1990s and giving rise to third-order cybernetics. Within this paper, we build upon this expanding body of knowledge by adopting a cybernetics lens to investigate the development of conflict within large technology and software engineer- ing programmes, and specifically large Enterprise System implementations. A cybernetic lens to analyze projects has recently been advocated by Lent [11], who suggests the approach is required to investigate the dynamics and be- haviours of project team members, which are underpinned by various feedback loops. We adopted the case study technique, and analyzed the results through a multi-method approach that used high-level social network analysis, qualitative data analysis, and diagrammatic modelling. Our results indicate that the multitude of team members invariably begin their work within the Enterprise System programme with a shared understanding of the programme-level vision, aims and objectives. However, subtle differences in employer objectives, alongside differences in the personal and professional char- acteristics of individual team members, slowly give rise to lo- calized forms of conflict, which if not effectively controlled, can lead to conflict at the programme-level through a variety of feedforward mechanisms and feedback loops. In this article, we will commence with a review of the literature to provide the context behind Enterprise System implementation, the background and theory of cybernetics, and the different types of conflict that can develop within project environments. We then define our approach taken for data collection and data analysis, before discussing the case study that represents a large technology and software engineering programme. We then adopt a cybernetics lens to discuss the development of conflict within the case study, and propose a conceptual framework that conveys how the dynamics and behaviours seen within the case study corre- spond to first-order, second-order, and third-order cybernetic systems. Finally, we conclude by developing suggestions for further

research into the cybernetics of conflict, and how to utilize various cybernetic mechanisms to dampen the effects of conflict once it has developed.

ENTERPRISE SYSTEMS AND THEIR IMPLEMENTATION

Enterprise Systems are large software applications that allow an organization to integrate their often-fragmented organization-wide data that is associated with their vari- ous business processes (potentially unique to the organi- zation, and often structured by organizational department or functional unit), into a single software-intensive system that uses preconfigured (and standardized) software modules and the associated hardware and middleware [12]. Due to the complexity of modern-day business environments and the increasing size of IS/IT systems, the implementation of Enterprise Systems need to be considered as transformation projects [13] that will impact the organization as a whole, and not merely as a technology project for implementation by the IT department [14]. In fact, large organizations usually employ third-party service providers to install and configure these software-intensive systems, and structure the imple- mentation programme around separate projects that align to the functional modules within the Enterprise System and the technical architecture required to host the software system. The largest implementations may utilize the services of both the software vendor (e.g. Oracle or SAP) and IT or IS professional service providers (e.g. Accenture, CapGemini, Deloitte, etc). Within such an environment, the client, vendor and professional service provider personnel are combined into distinct project teams that relate to the functional mod- ules (e.g. Human resources, Payroll, etc), technical architecture (e.g. web services, middleware infrastructure, database, etc), along with the Programme Management Office (PMO)that focuses on the overarching administrative and contractual aspects of the implementation. Consequently, it is oc- casionally difficult to discern precisely who is accountable for resolving emergent issues and risks that may span a number of the projects within the overall programme. Ad- ditionally, it can be difficult to identify who is responsible for the successful delivery of individual projects, or who is ultimately accountable for the end-to-end delivery of the overall business transformation programme. This integration of personnel from multiple organizations, along with their structuring into project teams that align to the functional modules of the Enterprise System, technical architecture to host the software, and project administration aspects of the programme, result in a complex interconnected social network of team members. Guimera and Nunes Amaral [15] speculate that the key to success of complex networks is their use of a modular structure, which in this case is the structuring of the overall Enterprise System implementation into discrete projects. Sommerville [16] has argued that software engineering is subtley different from other types of engineering, and there- fore the project management of software-intensive systems has a number of unique challenges. Along with traditional project management constraints relating to delivering the product to the customer within the predetermined timescales, ensuring the overall costs are within the agreed budget, deliv- ering the product to the agreed scope, and maintaining a well-functioning team [17], software project management has additional challenges. These software specific project man- agement challenges relate to: an intangible product, where it is oftentimes difficult to see progress due to there not being a physical artifact, as is the case in mechanical engineering; the larger software implementations are unique to the

particular customer, and lessons from experience as project manager at prior projects are not always relevant; software engineering processes and procedures are not standardized across the world, and are oftentimes either sector-specific (e.g. Public Sector, Financials Sector, Utilities and Energy, etc) or vary between customer organizations [16].

CYBERNETICS

Norbert Wiener defined Cybernetics as "the scientific study of control and communication in the animal and the ma- chine" [18], and that it is applicable when a system of interest contains a circular causal relationship, so that dynamics or behaviours developed from the system are able to affect the wider environment, which subsequently affects the system, thereby introducing feedback that initiates a change to the system. He later built upon this definition with specific refer- ence to communication within social systems, by advising that communication is based upon the spoken word being transmitted from a sender and decoded by a receiver, with this decoding step potentially being affected by the mental state of the receiver [19]. Indeed, this latter decoding step has the potential to introduce feedback through affecting any emotions being experienced by the receiver at the time of decoding the message, i.e. amplification or reduction of mag- nitude of emotion. This was further built upon by Shannon [20], who advised that bidirectional communication within cybernetics is a generalization of his Information Theory. Marko [21] extends this further, by explaining that cybernetics is the "science of message transmission, processing, and the regulation and control of complex systems". With specific reference to conflict within Enterprise System programmes, this means that communication between members of the pro- gramme may introduce positive or negative feedback to the emotional state or conflict state of individualteam members. Shortly after Wiener's definition of cybernetics, the pio- neers of the time began to develop additional granularity into the definition of a cybernetic system so that it could cater for the different types of research questions that are posed when investigating a system, especially a biological or social system. As such, cybernetics is inherently interdisciplinary, with an overall aim to elucidate unifying theories on how complex systems function and can be controlled [22]. Three orders of cybernetics were defined, withfirst-order cybernetics relating to the observed system, and being consistent with the definition from Wiener, is concerned with interactions among variables in the system. Second-order cybernetics is related to observing the system [23], so is concerned with the interactions between the observer and the observed [24]; an example from Enterprise System implementations being interactions between the project manager (observer) and the individual team members (the observed). Whilst third-order cybernetics is more reflexive in nature and provides a way of analyzing the relationships that exist between observers in a system and the effects of these relationships on the system [25]. The underlying premise of cybernetics is that an autonomous system, for example an individual human being, can be portrayed as having a set of personal aims/objectives/goals that they aspire to attain, and that they implement strategies to counter the effects of environmental factors that reduce the likelihood of achieving these aspirations. Heylighen and Joslyn [26] advise that there are three main approaches to managing such perturbations, and thus maintain regulation of the system: buffering, feedforward and feedback. Taking these in turn: Buf ering is the damping of perturbations through passive means (i.e. in the absence of active regulatory

mechanisms); Feedforward is the suppre- sion of an environmental factor before its affects have been able to perturb the system, which requires the ability to gather information and anticipate the effects of the perturbation and implement mitigatory measures; and Feedback is the imple- mentation of remedial action after an environmental factor has already affected the system, with the aim of reversing the negative effects and allowing the system to regain momentum towards the aims/objectives/goals. Finally, Stafford Beer pioneered the field of Management Cybernetics, which he defined as the "the science of effective organizations" [27]. Here he applied cybernetic laws and theories to the management processes/practices that werebeing used in all types of socio-technical organizations. Beer's Management Cybernetics, which focuses on man- agement in general, can be augmented to apply to Project Management specifically. For instance, project management is about control and communication of project resources to ensure the project objectives are achieved within time and budget constraints. Lent [11], with specific reference to cybernetics, advises that project managers, aided by their team and associated technical resources, aim to steer the project towards predefined goals (e.g. project milestones and ultimate objectives). He also advises that the project environment provides feedback to the project, and that the project management processes/procedures that are used to control the project, can be considered analogous to system mechanics from first-order cybernetics.

First-Order Cybernetics

Cybernetics, as a field of study, emerged out of the military needs of developing weapon targetting systems and servomechanisms during World War Two [18], with an initial focus on complex engineered systems that contained feedback mechanisms, and in particular, how they could be controlled and regulated [26]. As such, the early field of cybernetics was predominantly interested with integrating the fields of mechanical engineering, electrical network theory, logic modelling and control systems, to develop theoretical models that could be used to control physical engineered systems, which Wiener had referred to as Observed Systems [18], and was later defined as First-Order Cybernetics. The field of cybernetics is underpinned by both engineering and science, and as such, aims to identify regular patterns and repeatable behaviours within complex systems, and the associated mechanisms that underpin them [28]. Once the mechanisms are known, we are then able to develop predictions on the system's future state/dynamics due to the regularity/repeatability, and ultimately develop interventions to control the system. There are however situations where mechanism is unknown, and where the concept of a Black Box is invoked in order for us to make causal inferences between how differences in System Inputs can lead to corresponding differences in System outputs, whilst being es- sentially ignorant to the actual mechanistic behaviours of the system. Ashby [29] was the first to reason this approach, whereby the Scientific Observer constructs a descriptive model that contains an unseen, presumed mechanism, to transform a set of system inputs to a corresponding set of system outputs. First-order cybernetics considers human be- haviour to originate from such a 'black-box', but importantly, also considers the world to be a hierarchy of black boxes, such that cells make up humans, humans make up societies or corporate organizations, etc [22].

Second-Order Cybernetics

Cybernetics from 1980s onwards became known as second- order cybernetics and focused not only on what is being observed, but also on the observers who generate their own personal version of reality of the observed system, that aligns to their individual experiences [24]. Second-order cybernetics originated from the work of von Foerster in 1974 [30], where he introduced the concept of a second-order feedback loop to cybernetics, which related to the observer of the real- world cybernetic system actually being a cybernetic system themselves, thus having their own feedback loop. This is important because the intent was to redirect the focus of science from that of defining the extent of our knowledge of a system, to that of describing the processes, procedures and techniques that we use to develop our own personal version of reality [31]. The initial field of cybernetics, which focused on the control of a system, was therefore augmented to cater for the fact that there can be double-loop processes within systems (i.e. control processes that provide feedback into other control processes) due to the effects from observers of the underlying system. Hence, second-order cybernetics was born when the focus of investigation shifted to the observation of the ob- served system [32]. Von Foerster termed this theCybernetics of Cybernetics [23], hence the term second-order cybernetics, but this was subtley rephrased by Glanville, who states that "it is cybernetics, when cybernetics is subjected to the critique and the understandings of cybernetics" [28]. Turning back to the concept of the black-box, the crucially important point for second-order cybernetics is that the black-box is constructed by the observer. This in turn means that the observer is associated with the system of interest through their own feedback loop, which incorporates circularity into the observer-observed system relationship [28]. Although the early origins of second-order cybernetics were focused on biological systems, these were later used as analogies for social processes, and like constructivism, second-order cybernetics is now concerned with human cognitive systems [22]. Indeed, the use of second-order cybernetics to explain the dynamics and emergent behaviours of social systems has now become routine [33].

Third-Order Cybernetics

Whereas first-order cybernetics focuses on the system of interest and second-order cybernetics focuses on observing the system of interest, third-order cybernetics focuses on mutually observing systems [33]. Third-order cybernetics is underpinned by self-referentiality, where the observer is required to be reflexive, and to explicitly include their act of observing the system of interest, into their explanation of that system's dynamics and behaviours, which Boxer and Kenny have defined as the cybernetics of "observers observing ob- served systems" [32]. As such, third-order cybernetics allows us to investigate the effects of the observer, through their interactions with, the observed system [34]. As would be expected from the interwoven and recur- sive nature of cybernetics, complex social systems, such as the temporary organization that is created to implement an Enterprise System programme, have characteristics and behaviours that correspond to both first-order and second.

CONCLUSION

Large technology and software engineering programmes, such as the RM Programme, are increasingly implemented through a mixture of customer and specialist third-party resources. These multi-partner working environments can be thought of as a complex social system, that managers, in this case programme and project managers, need to control. This organizational

complexity is predominantly due to issues relating to inter-organization process control and communication, which oftentimeslead to various forms of conflict within the programme or one of its constituent projects. This can be due to competing objectives and priorities of the various organizations, along with incompatibilities of team members within the work-based social network of the implementation programme. If not brought under control, conflict can lead to complex emergent behaviours and dynamics within the wider social network, which can severely impact the likelihood of successful programme implementation of these software- intensive systems. Cybernetics is inherently interdisciplinary, with an overall aim to elucidate unifying theories on how complex systems function and can be controlled. Three orders of cybernetics have been defined, with first-order cybernetics relating to the observed system; second-order cybernetics relating to observing the system; and third-order cybernetics, being more reflexive in nature, provides a way of analyzing the relationships that exist between observers in a system and the effects of these relationships on the system itself. With particular emphasis to a multi-partner environment, such as the HR Project, we discovered that cybernetic mechanisms may exacerbate conflict development through amplification, transition, and propagation. The conceptual framework pre- sented in this study, illustrates how a cybernetics approach to conflict within Enterprise System implementations can be generalized as a problem of regulation. Our findings indicate that project team members act as von Foerster observers within a second-order cybernetic system, whereby they observe the relative progress of the project along with the behaviours of other team members, in order to develop their personal mental model of the project. If the mental model does not align with the team member's personal values, motivations or objectives, then misalign- ment ensues between the goals/objectives of the first-order cybernetic system of the project (the Observed System) and the second-order cybernetic system of the individual team member (the Observing System). In addition, once task or process conflict develops at the second-order cybernetic level, positive feedback loops may be enacted that affect the interpersonal relationships and professional interactions between the team members at a third-order cybernetic level. Indeed, within the HR Project, we found that relationship conflict is the worst of the three types of conflict and is the hardest to control or eradicate. Furthermore, the HR Project has shown that misalignment of goals may not only lead to conflict development in the respective project team, but when applied to a multi-partner programme environment, it may also lead to devastating effects on the productivity of the team members, and if not regulated, a decrease in the likelihood of success of the overall programme. It is our aspiration that the conceptualization of the cyber- netics of conflict in this study, may promote the development of interventions to regulate or control conflict by programme and project managers on multi-partner technology or soft- ware engineering programmes. We sincerely hope that the conceptual framework will revive interest in the cybernetics of complex social systems, and that the engineering project management community will harness the cybernetic perspective to control and regulate their projects that are afflicted by conflict. Furthermore, we propose that along with PMs being trained in programme/project management methodolo- gies that are accredited by a relevant professional body, we advocate that they also become familiar with Conflict Res- olution Styles and ways of introducing Cybernetic Control Mechanisms

into their project management interventions. In addition, we propose that professional bodies, such as the In- stitute of Electrical and Electronics Engineers, Project Man- agement Institute, or Association for Project Management, should make use of the Cybernetics perspective when they refresh/update their Project Management Standards for Tech- nology and Software Engineering (e.g. PMI-IEEE Software Entension to the PMBoK Guide [12]), in order to ensure the cybernetics perspective can take centre stage when applied to monitoring, control, and regulation of complex projects.

REFERENCES:

[1] T. L. Griffith and G. B. Northcraft, "Cognitive elements in the implementation of new technology: Can less information provide more benefits?" MIS Quarterly, vol. 20, no. 1, pp. 99–110, 1996.

[2] D. Robey, D. L. Farrow, and C. R. Franz, "Group process and conflict in system development," Management Science, vol. 35, no. 10, pp. 1172–1191, 1989.

[3] R. Rauniar and G. Rawski, "Organizational structuring and project team structuring in integrated product development project," International Jour- nal of Production Economics, vol. 135, no. 2, pp. 939–952, 2012.

[4] R. A. Williams, "Conflict propagation within large technology and soft- ware engineering programmes: A multi-partner enterprise system imple- mentation as case study," IEEE Access, vol. 7, pp. 167 696–167 713, 2019.

[5] S. J. Whitty and H. Maylor, "And then came complex project management (revised)," International Journal of Project Management, vol. 27, no. 3, pp. 304–310, 2009.

[6] R. H. Thayer, A. B. Pyster, and R. C. Wood, "Major issues in software engineering project management," IEEE Transactions on Software Engi- neering, vol. SE-7, no. 4, pp. 333–342, 1981.

[7] Z. Zhang and W. Pedrycz, "Intuitionistic multiplicative group analytic hierarchy process and its use in multicriteria group decision-making," IEEE Transactions on Cybernetics, vol. 48, no. 7, pp. 1950–1962, 2018.

[8] K. Kandhway and J. Kuri, "Using node centrality and optimal control to maximize information diffusion in social networks," IEEE Transactions on Systems, Man, and Cybernetics: Systems, vol. 47, no. 7, pp. 1099–1110, 2017.

[9] S. Rivard and L. Lapointe, "A cybernetic theory of the impact of imple- menters' actions on user resistance to information technology implemen- tation," in Proceedings of the 43rd Hawaii International Conference on System Sciences. Honolulu, HI, USA: IEEE Computer Society, January 2010, pp. 1–10.

[10] S. A. Umpleby, "Cybernetics: A general theory that includes command and control," in Proceedings of the 20th International Command and Control Research Technology Symposium. Annapolis, MD, USA: International Command and Control Institute, June 2015.

Seasonal Food Recommendation Framework Using Machine Learning and Matching Algorithm

[1]Mohamed Anies. M, [2]Vignesh. S, [3]Mukesh Kanna. V, [4]Dinesh Kumar. N, [5]Dr. M. Sharmila Begum

[1,2,3,4] Department of Computer Science and Engineering, Periyar Maniammai Institute of Science and Technology, Vallam, Thanjavur, India

[5] Associate Professor, Department of Computer Science and Engineering, Periyar Maniammai Institute of Science and Technology, Vallam, Thanjavur, India

Email: [1]mohamedanies55@gmail.com, [2]shanmugamrenuga4@gmail.com, [3]mukeshcsp3@gmail.com, [4]rameshdinesh1902@gmail.com, [5]sharmila_se@pmu.edu

Abstract - Every season is just like the mood of our Mother Nature, sometimes hot sometimes cold, and sometimes lukewarm. She brings different foods depending on her moods. Our body also responses according to the change in seasons and requires different food and nutrients. The seasonal fruits and vegetables have all the vitamins and nutrients that our body needs in that particular season. Here are some of the main characteristics for each dosha to help you determine which type matches you best:

Pitta (fire + water). Intelligent, hard-working, and decisive. This dosha generally has a medium physical build, short temper, and may suffer from conditions like indigestion, heart disease, or high blood pressure.

Vata (air + space). Creative, energetic, and lively. People with this dosha are usually thin with light frame and may struggle with digestive issues, fatigue, or anxiety when out of balance.

Kapha (earth + water). Naturally calm, grounded, and loyal. Those with a kapha dosha often have a sturdier frame and may have issues with weight gain, asthma, depression, or diabetes

Index terms--- vata, pitta, kapha, food, body type

INTRODUCTION

It is the field of study that gives computers the capability to learn without being explicitly programmed. ML is one of the most exciting technologies that one would have ever come across. As it is evident from the name, it gives the computer that which makes it more similar to humans: *The ability to learn.* Machine learning is actively being used today, perhaps in many more places than one would expect. In the eminent era of breakthrough in technology, the world is presented with a boon and bane. The need for machines is inevitable as they have become a part of human source. Our human vision is capable of capturing the object or image and identifies the captured input. When a massive data set is given as input along with required GPUs and algorithm which consumes less computation time and provides output with high accuracy, the computers are skilled to detect and classify the captured input. Machine Learning is one such technique to train the machine to have a skill set. Particularly, Machine Learning plays a major role in detecting and classifying the objects using various algorithms. ML is widely used in tracking, face recognition, video surveillance, etc. The detected object's characteristics are classified as classes using algorithms. The necessity for object detection emerged when the object needs to be identified from the images and video sources. Over the

years, many algorithms were replaced by the latest and efficient algorithms which detected the objects with high accurate

PROPOSED SYSTEM

Healthy nutrition can help to reduce the risk of several diseases, such as heart disease, diabetes, strokes, and cancer. As an outcome, we recommend a food based on his or her body type (vata, pitta, kapha) and a few medical parameters in our project.

If we Didn't recommend foods according to their body type, it will lead to certain problems or it may affect the patient health

For ex: one patient is having kapha body type and he is a diabetic. In this, if we recommend foods only for diabetes it may affect his health. So, we have to analyse his body type and climatic changes and to recommend the food**.**

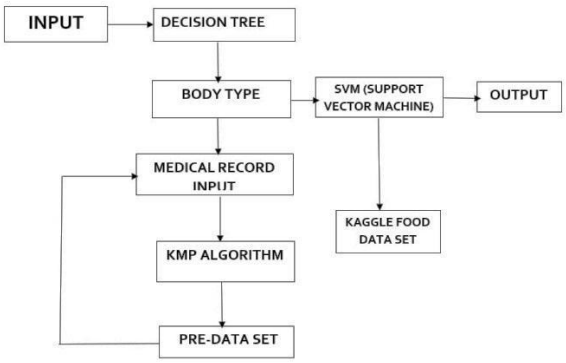

LITERATURE REVIEW

In paper [1], A food recommendation system that takes into account nutritional information as well as consumer preferences. general structure for daily meal plan recommendations, with the simultaneous management of nutritional and preference-aware data as a key function. MCDM method AHP Sort as multi-criteria decision analysis tool A food recommendation approach focused on generating daily personalized meal plans for the users, according to their nutritional necessities and previous food preferences. only considers physical user information for daily nutritional requirement calculation

In paper [2], Personalized Food Recommendation Using Deep Neural Network The proposed model extracts interested ingredients from the set of recipes of user's favorite dishes that is given before using the system. deep neural network (DNN) a model to recommend dishes from user preference and eating history. We build a classification model to create a list of recommended dishes from user profile in this model the accuracy level will be low compare to other

In paper [3], Ayurvedic diet and lifestyle recommendations for various Prakrit (constitution) citizens Persons who properly follow the diet and lifestyle regimen according to own Prakriti will have better health and strength. So, for maintaining health in a proper way and to stay away from illness, Machine learning algorithm Ayurveda describes healthy lifestyle as physical, mental, social and spiritual conducts and through it one can make the society disease free in this recommendation is only use for small data set

In paper [4], Machine Learning and Matching Algorithm Nourishment Recommendation System for Children Nourishment Recommendation Framework (NRF) where we take user input from children, analyze the data and finally an output is generated that presents an improved diet plan Nourishment Recommendation Framework (NRF) system will help children attain proper nutrients that are essential for growth, development and other body functions. Nutriments are recommended based on a child's activity level, height, weight, health status, favorite food and BMI. Only use for other nutritional food database and it's only detecting a child's disease

In paper [5], Healthy Recipe Recommendation using Nutrition and Ratings Models The healthiness and tastiness of novel recipes

according to users' preferences Three -part algorithm Graph neural network (GNN) three-part algorithm to predict users' ratings on recipes and recommend healthier and tastier alternative recipes. We constructed a nutrition model that assigns various nutrition values to ingredients using constrained optimization of a linear model. In the model will give the result slowly and only use the other data set

In paper [6], Diet-Right: A Smart Food Recommendation System We emphasize the importance of selecting a healthy diet that meets the nutritional needs of patients. 1.ant colony algorithm 2. ACO Diet-Right is a cloud-based food advisory framework. It uses an ACO model to suggest a list of optimal food products based on user feedback. This is only for the individual person to give the food recommendation.

In paper [7], Combining clustering technology with the weighted slope one predictor yields a balanced food recommendation scheme The suggestion is Selected data from hundreds of entries to obtain reliable and accurate information that is simply learning to predict unknown information weighted slope one that is optimized for job execution and dynamic that generate acceptable recommendations and obtain a satisfied response by improving screening metric information and using it to predict user community and item clustering technology with weighted slope The suggestion is Process with reliable job support for food recommendation for good health by using minimal information on finding the results in real time, which refers to the use of data for decision-making in the present. Only consider the food recommendation not food to patient avoid the food recommendation that affect patient's disease

In paper [8], Deep Learning Based Health Recommender System Using Collaborative Filtering The health recommender framework is critical for determining outcomes such as diagnosis, health care, therapeutic pathway-based treatment options, and alternative medications based on a patient's health profile**.** Restricted Boltzmann Machine (RBM) Convolutional Neural Network (CNN) deep learning system for intelligent HRS, 1One of the most common emerging technology for extracting supplementary information for a patient from healthcare data is health recommender systems. In comparison to other health recommender systems, RBM-CNN shows greater accuracy. provide less accuracy with a low level of privacy

In paper [9], An overview of recommender schemes in the safe food domain is presented Techniques for individual and community recommendations in the nutritious food domain. Furthermore, we examine the current state-of-the-art in food recommender systems and address research issues relevant to potential food recommendation technologies. Hybrid recommender systems (Hybrid recommender systems) are a form of recommend Content-based recommender systems (CB) Knowledge-based recommender systems (KBS) the safe food domain, which focuses on personalizing recommendations by taking into account users' tastes and/or dietary needs. All food recommender services, in general, play an important role in delivering food products that fulfil the tastes and nutritional needs of consumers, as well as persuading them to adopt healthy eating habits. User knowledge, recommendation algorithms, evolving eating habits, providing explanations, and group decision-making are all challenges.

In paper [10], Automatic Generation and Recommendation of Outlier Analysis Recipes are a blend of many different recipes. They are only recommended to the consumer if it is absolutely appropriate, and the recipe contains adequate nutrition. Ontology and machine learning was used to build a dietary guidance

scheme. Recipes can be suggested by the framework based on your preferences. the user's health condition and preference Limited training data set used for analysis and recommendation for diabetic recipes

In paper [11], Ontology and Semantic Matching for Diabetic Food Recommendations Foods recommendation for diabetes patients is indispensable for controlling blood sugar levels. The Automation system to determine foods combination for diabetic patients is needed to solve these problems OWL and SWRL. Domain knowledge based on Ontology is needed to process foods composition automatically foods menu based on the number of calories per day could help patients with diabetes to control their blood sugar levels only73 % data were able to be correctly predicted by this method.

In paper [12], Food Recommendation for Patients with Chronic Kidney Disease Using Machine Learning Machine Learning-Based Food Recommendation for Patients with Chronic Kidney Disease WEKA and then further using query-based matching Identify CKD and NOTCKD patients, where Random Forest was more accurate than SVM and Naïve Bayes, with an accuracy of 99.75% Only work with smaller dataset

In paper [13], Market2Dish A Food Recommendation System That Is Health-Conscious Market2Dish may identify ingredients in micro-videos taken from the market, characterize users' health from their social media accounts, and then recommend customized healthy foods to them. Hierarchical memory network-based recommender system is to help people find out the personalized food and keep a healthy diet, thus avoid the disease caused by unhealthy eating Habits Performance and the user interface experience is low.

In paper [14], The Design of Typical Balinese Food Recommendation System Using Hybrid Method of Collaborative Filtering and Slope One Algorithm on Mobile Device Platform the typical Balinese food stalls that rarely get a rating can be recommended evenly with the help of ICHM (Item-based Clustering Hybrid Method) and Slope One algorithm Hybrid Method of Collaborative Filtering and Slope One Algorithm recommendation of stall with MAE value of 0.11. The results obtained are larger (worse) than previous research with value of MAE 0.00021778. items entered on the system (not yet rated) can be recommended based on item content in the ICHM.

In paper [15], Design of a User-Informed Diet Recommendation System for a Healthcare Service a personalized diet advice service in health care for preventing and treating coronary heart disease diet recommendation based on required nutrients and food preference it provides the diet recommendation as a daily service. that the service helps to prevent and manage diseases by recommending a personalized diet for users. Doesn’t work with the context recognition middleware for the management of health that obtains the activity and information of diet patterns

In paper [16], Recommendations for Food and Therapy Using Machine Learning Techniques, a System for Autistic Syndrome the system will recommend food and therapy for the autistic children are classified as such based on their symptoms. The method employs the k-means algorithm for grouping symptoms based on their types, as well as association rule mining for diet and therapy recommendations. it is categorization by using the Overlapping k-means (OKM) algorithm along with association rule mining. OKM algorithm will categorize the symptoms, by considering nine significant types as main feature that have an

effect on autistic children Model has not this technique to balance the overlap and outlier problem with proposed service and technology to provide therapy and diet care for autistic syndrome in public hospitals

In paper [17], Food recommendation system for meals-out to support the nutrient balance visualizing excess/deficiency of intake nutrients for their meals may help them to improve the balance of nutrients experiments, the improvement of the three major nutrient balance to be ingested was confirmed for subjects who were recommended the foods by the proposed system experiments, the improvement of the three major nutrient balance to be ingested was confirmed for subjects who were recommended the foods by the proposed system

In paper [18], For diabetic patients, the Food Recommendation System (FRS) employs food clustering analysis. In terms of nutrition and food characteristics, our framework will prescribe the appropriate substituted foods. Food clustering review using the Self-Organizing Map (SOM) and K-mean clustering the FRS was evaluated by nutritionist nutrition is the major key for control diabetes. Nevertheless, the existing categorization mechanism is not efficiently for classify the food group for diabetic patient. To improve proposed service, technology and algorithms to diabetes diet care in Thailand

In paper [19], Machine Learning Algorithms for building Recommender Systems the state-of-the-art Recommender systems with the prime focus on hybrid recommender systems. different categories of hybridization models are studied, and the existing work is classified categorically based on the hybrid mode Machine Learning Algorithms studied and compared the various recommendation approaches developed till date. The prime focus of this study is on Hybrid recommender systems research is required to explore the other remaining possible hybrid models using various Machine learning algorithms

In paper [20], Food Recommendation by Dietary Management System using ID3 for Indian Food Database: Automated Menu Planning Algorithm for Children Early childhood nutrition is critical for proper body growth and organ formation, as well as a healthy immune system, cognitive, and neurological development. Dietary Management System using ID3 is proposed Typically, balancing the diet necessitates specialist nutrition expertise and is a time-consuming method for a nutrition advice framework using an integrated menu planning system. It’s not applicable for all aspects of the condition, as well as the treatment plan and diet for all age groups, will be considered.

In paper [21], What-To-Taste: A Food Recommendation System: recommends food according to customer’s experience, customer’s ratings on cuisine and customer’s taste. The content-based approach treats the recommendation problem as a search from the collected data the proposed arrangement of WHAT-TO-TASTE, the task is prepared and completely useful the client can undoubtedly get suggestions for their food advantages Recommendation system only recommend based on taste only not the Nutritional factor in the process of recommendations

In paper [22], Based on a content filtering algorithm, a food recommendation system has been developed: food item list and shows the result based on the food item's nutritional value Web scraping was used to capture the data collection, which was then preprocessed on the basis of attributes. The data was then used to create a device model. The information in the app is solely focused on information gathered by web scraping.

In paper [23], Recipe Recommendation Systems: A recommender system is useful for filtering a wide range of product, service, or

media content information. Content-based Filtering algorithm the recommendation systems have drawbacks, and other methods have shown better results in some cases. Collaborative filtering is not working in model.

CONCLUSION

In our project we recommend a food based on his/her body types, medical parameter, and also the current season of the year. If we Didn't recommend foods according to their body type, it will lead to certain problems or it may affect the patient health.

ACKNOWLEDGEMENT

With a deep feeling of indebtedness, we extend our heartfelt gratitude and profound thanks to our guide Dr. M. SHARMILA BEGUM, for her valuable guidance, spontaneous help and assistance in providing the continuous encouragement for the successful completion of the study. We will never fail to acknowledge the help and encouragement that we received from our parents and support from friends in the preparation of our work. We are very thankful to all who have helped us.

REFERENCES:

[1] Robin Burke. Hybrid recommender systems: Survey and experiments. User Modeling and User-Adapted Interaction, 12(4):331{370, 2012.

[2] Mukund Deshpande and George Karypis. Item Based Top-N Recommendation Algorithms. ACM Transactions on Information Systems, 22(1):143{177, 2004.

[3] Jill Freyne and Shlomo Berkovsky. Recommending food: Reasoning on recipes and Ingredients. In Proceedings of the 18th International Conference on User Modeling, Adaptation, and Personalization, volume 6075 LNCS, pages 381{386, 2010.

[4] Uri Hanani, Bracha Shapira, and Peretz Shoval. Information filtering: Overview of issues, research and systems. User Modeling and User-Adapted Interaction, 11:203{259, 2001.

[5] Dietmar Jannach, Markus Zanker, Alexander Felfernig, and Gerhard Friedrich. Recommender Systems: An Introduction, volume 40. Cambridge University Press, 2010

[6] Dietmar Jannach, Markus Zanker, Mouzhi Ge, and Marian Groning. Recommend Systems in Computer Science and Information Systems – A Landscape of Research. In E-Commerce and Web Technologies, pages 76{87. Springer Berlin Heidelberg, 2012.

[7] Ron Kohavi. A Study of Cross-Validation and Bootstrap for Accuracy Estimation and Model Selection. International Joint Conference on Artificial Intelligence, 14(12):1137{1143, 1995

[8] Chia-jen Lin, Tsung-ting Kuo, and Shou-de Lin. A Content-Based Matrix Factorization Model for Recipe Recommendation, volume 8444. 2014.

[9] Michael J. Pazzani and Daniel Billsus. Content-Based Recommendation Systems. The Adaptive Web, 4321:325{341, 2007.

[10] G. Salton. Automatic text processing, volume 14. Addison-Wesley, 1989

[11] Jorge Castro, Raciel Yera, and Luis Martínez. A fuzzy approach for natural noise management in group recommender systems. Expert Systems with Applications, 94:237–249, 2018.

[12] Li Chen and Pearl Pu. Critiquing-based recommenders: survey and emerging trends. User Modeling and User-Adapted Interaction, 22(1-2):125–150, 2012.

[13] T. Cioara, I. Anghel, I. Salomie, L. Barakat, S. Miles, D. Reidlinger, A. Taweel, C. Dobre, and F. Pop. Expert system for nutrition care process of older adults. Future Generation Computer Systems, 80:368–383, 2016.

[14] Hasan DinÃ˜ger, Serhat YÃijksel, and Luis Martínez. "analysis of balanced scorecard-based servqual criteria based on hesitant decision-making approaches"."Computers & Industrial Engineering", 139:1 – 12, 2019.

[15] Hasan DinÃ˜ger, Serhat YÃijksel, and Luis Martínez. "balanced scorecardbased analysis about european energy investment policies: A hybrid hesitant fuzzy decision-making approach with quality function deployment"."Expert

Systems with Applications", 115:152–179, 2019.

[16] V. Espín, M.V. Hurtado, and M. Noguera. Nutrition for elder care: a nutritional semantic recommender system for the elderly. Expert Systems,33(2):201 – 210, 2016.

[17] A. Fardet and Y. Boirie. Associations between food and beverage groups and major diet-related chronic diseases: an exhaustive review of pooled/meta-analyses and systematic reviews. Nutrition Reviews, 72(12):741–762, 2014.

[18] S Fernández and E. Burgaleta. Composition tables. Foods and artificial nutrition. University of Granada, 2003.

[19] M. Ge, F. Ricci, and D. Massimo. Health-aware food recommender system. In Proceedings of the ACM International Conference on Recommender Systems, pages 333–334, 2015.

[20] Michael J Gibney and Marianne C Walsh. The future direction of personalised nutrition: my diet, my phenotype, my genes. Proceedings of the Nutrition Society, 72(2):219–225, 2013.

Smart Anti Home Theft System

[1]Sukirdha Priya T, [2]Divyabharathi S, [3]Mahitha B, [4]Shobigaa Sri R K

[1] Department of Information Technology, Bannari Amman Institute of Technology, Sathyamangalm, Tamilnadu, India
[2] Department of Information science and Engineering, Bannari Amman Institute of Technology, Sathyamangalm, Tamilnadu, India
[3,4] Department of Computer science and Engineering, Bannari Amman Institute of Technology, Sathyamangalm, Tamilnadu, India
Email: [1]sukirdhapriya.it19@bitsathy.ac.in, [2]divyabharathi.ig19@bitsathy.ac.in, [3]mahitha.cs19@bitsathy.ac.in, [4]shobigaasri.cs19@bitsathy.ac.in

Abstract - The proposed research methodology aims to design a generally implementable framework for providing a house owner/member with the immediate notification of an ongoing theft (unauthorized access to their premises). For this purpose, a rigorous analysis of existing systems was undertaken to identify research gaps. The problems found with existing systems were that they can only identify the intruder after the theft, or cannot distinguish between human and non-human objects. Wireless SensorsNetworks (WSNs) combined with the use of Internet of Things (IoT) and Cognitive Internet of Things are expanding smart home concepts and solutions, and their applications. The present research proposes a novel smart home anti-theft system that can detect an intruder, even if they have partially/fully hidden their face using clothing, leather, fiber, or plastic materials. The proposed system can also detect an intruder in the dark using a CCTV camera without night vision capability. The fundamental idea was to design a cost-effective and efficient system for an individual to be able to detect any kind of theft in real-time and provide instant notification of the theft to the house owner. This Project "IoT based anti theft flooring system using Raspberry Pi" where we will use image processing on live video to identify theft using motion and also feature the area where the act occurred. Image is sent through IoT(on 'Gmail account of owner').Technology has reached a stage where mounting cameras to capture video imagery is cheap, but finding available human resources to sit and watch is imagery. In this system, we use a camera along with raspberry pi along with a circuit with LCD display IR for night vision and cloud for storage. As soon as a camera gesture is detected in camera, the network uses image processing to detect an exact area of incident and highlights it accordingly.

Keywords---Raspberry pi, PIR sensors, camera, USB, Buzzer

INTRODUCTION

IoT based anti theft flooring system is a system which is made for maintaining security. it is a smart device for security purpose. This is a smart monitoring system, it is a device which is made for the security purpose. The main objective of this project is to make a smart monitoring device which monitors the area in which it is implemented. this device is installed in that area where no one is permissible to enter
except the authorised persons. Only those people are allowed to enter who are authorised in that particular area. If any unauthorised person enters in that field then this smart device will capture the face of that person and if that person is legal then it is ok and if not then the buzzer of this will get on and it sends an alert message to the owner of that place. In this device a camera is used and to make it smart different sensors are used like PIR sensors along with raspberry pi, for the sound purpose a buzzer is used and for the storage purpose cloud service is used. USB also plays a very important role because the captured images are going to be saved there only and it saves the images and along with the basic details of the legal persons like its name, address, mobile number. Some legal persons details are already there so that when a legal person enters into that particular area the camera will capture the image and though

devices it matches that image and when match found the buzzer will not make noise. This system is based on the concept of IOT(internet of things) and these types of technologies are implemented for the better security purpose. By using this the security of that place will become stronger. This smart system should be installed everywhere the security will get stronger.

OBJECTIVE:

If we talk about our country, INDIA. Most of the crimes occur in big shops, jewellery shops, houses etc. all these places are implemented with a CCTV camera only and no other security is provided to that shop. In that case most of the crimes are held and owners of those shops have to suffer from a big loss and the police catch those criminals after so many days or after many months or we can say crimes are usually found out after it is being committed. Crime rate is also increasing very rapidly and after looking at all this I have decided to make a smart monitoring system that is an IOT based anti-theft flooring system. The main objective is to make this detect crime or any unnecessary actions that are performed and required actions will be taken at instant only. So that owners don't have to worry about their assets and their assets will be safe from stealing. It captures an image when any motion is detected is prevented in secured areas.

It provides:-

1. *SAFETY*- if a person is not present in the shop then this device will provide security to the shop. This smart device will protect the whole shop even in the absence of the owner. This device will take care of all the assets.
2. *RELIABILITY*- This system will take less electricity. so that it works on both AC and DC current. This system will take electricity as normal as other electronic devices use but if there is no electricity then additional

battery backup is provided to keep the system in working mode. In this monitoring system the power consumption is very less.

3. *PROOF*- it is the most important factor whenever a crime happens. Camera will take images of the unauthorised person and it saves it into a storage device so that afterwards the further investigation can happen. Camera monitors all the things which are happening there and takes images and the raspberry pi gives the signal to the buzzer so that the buzzer will start beeping.
4. *CHEAP*- to implement this device the cost will be very low or according to what type of devices you are using to implement this, electronic devices can also be cheap or not.

IMPLEMENTATION OF THE FRAMEWORK

1. CAMERA:

- It will be installed in the hidden area. so that unauthorised people will not see the camera.
- Camera will monitor all the things which are happening there
- Camera will be connected to raspberry pi so that the captured images will go there.
- In this system, Robodo 640*480 VGA CMOS (Complementary Metal Oxide Semiconductor) camera is used.
- It supports image scaling.
- IO voltage: 2.5V to 3V.
- It has high sensitiveness for low light operation. Best night view security camera is used so that it will be able to capture images in the dark.

2. PIR sensor:

- It stands for Passive Infrared Sensor.
- Also known as motion detectors.
- It is used to detect the presence of a human being.
- It detects the presence of humans from a distance of approx. 12 meters.
- Its sensitivity is high for detection.
- It requires minimum electricity of 5volts.
- This is also connected to Raspberry pi.

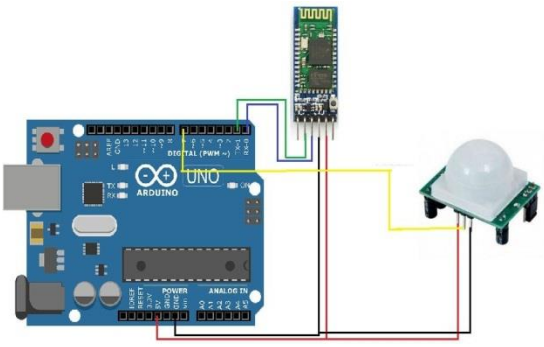

3. Buzzer:

- It is a very small device connected to Raspberry pi.
- It is an audio signalling device.
- The buzzer will get on whenever it receives signal from the raspberry pi.

4. Raspberry pi:

It is the most important part of this project because all the things like camera, sensor, buzzer etc. all are connected to this.

- In this system Raspberry pi 3 model B has used.
- It has 40 pins.
- It has 26 GPIO (General purpose input/output) pins.
- It has 4 USB 2.0 ports.
- 1GB RAM.
- CSI camera port for connecting raspberry pi camera.
- It is power efficient.
- It acts as a server, it receives input from a PIR sensor.
- Captured image is stored in raspberry pi

WORKING:

In this system Raspberry pi, USB, Camera module, Buzzer, PIR sensor is used. In this the raspberry pi has been used as the heart of the system. The camera continuously checks the status of that particular place by camera and sensor. Person is entering is checked by the PIR sensor and if the person is illegal then it sends a notification to the owner through message or e-mail and the buzzer
will start beeping. Camera continuously sends an image to the owner.

Simple algorithm to understand the working.

Step 1) All the devices are on and all small devices are connected to raspberry pi.

Step 2) one person enters into that particular area, where it is installed.

Step 3) if the person who entered into that area will be known by the PIR sensor and the camera starts monitoring the things.
Step 4) if the person who entered into that area is authorised, then it is ok.
Else (unauthorised) Then the camera will send the signals to the raspberry pi and the owner starts receiving the notifications and the buzzer starts beeping.
Step 5) through this the unauthorised person will not be able to steal any asset.

HOW THAT WORKS?

- Power supply is given to raspberry pi.
- USB, PIR sensor, camera module are connected to raspberry pi.
- Camera module is responsible for the monitoring which is going on in a particular place.
- If an illegal person is present at that place then the camera will capture all the things and it sends signals to raspberry pi and raspberry pi sends notification through e-mail or message to the owner.

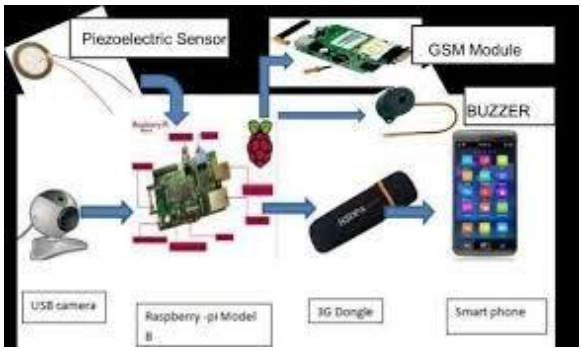

ADVANTAGES

- By installing this we can secure the things.
- Security of many places like banks, museums and of jewellery shop will be high.
- Crimes will be less.
- It also works as an informer of the owner.
- •In this system, only one time investment is there and your things will get secured.
- This device is free from hacking.
- Once it is installed it will work for many years.
- The chance of hacking is very less.
- Very little electricity is needed.

DISADVANTAGES

- To install this device, one professional is needed.
- Regular maintenance will be there. Like sometimes in this smart monitoring system some small devices will not be in a working condition. So, you have to buy a new device.
- This monitoring system should be regularly checked because maybe crime is happening and the camera is taking images continuously and the camera is giving negative signals may be the buzzer will not at that time. So, the entire system is of no use.

EVALUATION

There are 3 steps for our program:
Step 1: To detect the face. Given an image we want to detect which part of our image is face.
Step 2: To generate the labels for the training data and then training our classifier. Step 3: To predict the face. So given an image we want to predict whose face is it.
For that we need to install two dependencies: open cv and numpy. After that we will install both these via anaconda. In this way we can get the latest version of python so that it does not mess with system libraries.
There are three folders numbered 0,1 In 0 random images of people are there then in folder 1 all the testing images are there and in folder.

TOTAL IMAGES	CORRE CT IMAGES	WRONG IMAGES	ACCUR ACY
40	30	10	75%

9.CONCULSION

This project is mainly focused to design and develop efficient and convenient motion detection surveillance i.e. an Anti-Theft device to solve security problems which will help to reduce/stop theft. The main Advantage of the project is Easy to implement, Low cost with High quality.

REFERENCES:

[1] Smart Surveillance Monitoring System Using Raspberry PI and PIR Sensor "Sanjana Prasad1, P.Mahalakshmi 2, A. John Clement Sunder3, R.Swathi4" International Journal of Computer Science and Information Technologies, Vol. 5 (6) , 2014

[2] AN INTERNET OF THINGS (IOT) BASED SECURITY ALERT SYSTEM USING RASPBERRY PI"A. Arun Raja, R.Naveedhab, G. Niranjana Devi C and V. Roobini" Asia Pacific International Journal of Engineering Science, Vol. 02 (01) (2016)

[3] Regularized Transfer Boosting for Face Detection Across Spectrum. IEEE Signal Process. Lett. 2012, 19, 131–134. [CrossRef]

[4] Alobaidi, W.H.; Aziz, I.T.; Jawad, T.; Flaih, F.M.F.; Azeez, A.T. Face detection based on probability of amplitude distribution of local binary patterns algorithm. In Proceedings of the 2018 6th International Symposium on Digital Forensic and Security (ISDFS), Antalya, Turkey, 22–25 March 2018; pp. 1–5.

[5] Deepak.S.Kumbhar, H.C.Chaudhari, Shubhangi M.Taur, Shubhangi S.Bhatambrekar. IoT Based Home Security System Using Raspberry PI-3. International Journal of Research and Analytical Reviews (IJRAR) 2019.

Smart Computer Vision System for Vision Loss Person

[1]Mr. D. Baskaran, [2]S. Aravind, [3]V. Naveenkumar, [4]P. Sneka, [5]S. Syndhiya

[1] Associate professor, Department of Electronics and Communication Engineering, Nandha College of Technology, Tamil Nadu, India
[2,3,4,5] UG Scholar, Electronics and Communication Engineering, Nandha College Of Technology, Tamil Nadu

Abstract - With the help of the image processing technique we designed an intelligent assistive system for the visually impaired. Project vision is to focus on the field of medical science, which paves a way to the next level of medical technology. It is a blind assistive device, the Gadget is engaged with microcontroller, camera module, speaker and spectacles. This device is way more easier to handle. Therefore, it can be used by all kind of people. The device works by detecting the known person's recognition, texts to speech, obstacles detections and distance measurement with signal identification. This helps to rectify the visual problem of blind people. This paper discusses about the design of such a system and the challenges involved in designing the device. The gadget works by distinguishing the known people acknowledgment, writings to discourse, impediments recognitions and distance estimation with signal ID. This assists with correcting the visual issue of visually impaired individuals. It helps in increment of fearlessness inside the visually impaired. This framework depends on raspberry pi, a solitary board process model and Tensor Flow light system. The calculation created is tried for recognizing objects like a table, a seat, a TV, a PC, a mouse, a phone, a jug and so forth .This framework is fit for distinguishing individuals just as items. The testing is done in shifting light, foundation, and distance in inside just as open air situations. This framework utilizes Google based example quantized SSDLite-MobileNet-v2 object identification model, which is prepared of the MSCOCO dataset and changed over to run on open CV. We propose a camera based visual help system for text perusing, movement of articles and the sensations of people and so on It changes over into a voice yield to help daze people groups. Hence, we propose this framework from a solitary camera-caught picture just as more number of casings and feature some example applications being worked on and possible thoughts for future turn of events.

Keywords--- Raspberry pi, object detection, Face detection, Text recognition, visual assistance

INTRODUCTION

Among 36 million people around the world who are visually impaired, about 15.0 million are found in India. India is the world's largest blind populated nation. India requires 2-2.5 lakh pair of eyes every year, it has 109 eye banks that manages to collect around 25,000 pair of eyes out of which 30% can't be utilized. Many people cannot afford such eyes treatments. To be categorized as blind, there is a complete loss of vision. Blindness cannot be treated by simple visual aids. Whether due to congenital inheritance, acquired diseases, accidental injuries or other reasons, visual impairement causes a certain level of inconvenience to these lives. It is very difficult for visually impaired people to walk independently in strange and complex areas. In particular aerial obstacles such as awnings, tree branches and similar objects, typically have no projection on the ground or floor. When a visually impaired person walks alone and falls, he may feel less confident and helpless when walking alone, potentially resulting in serious injury. There is a need of smart solution using the image processing technique.

Even though most of the research labs and a few startups have come up with advanced devices to assist the visually impaired people but only a handful are affordable to most of the people due to higher prices and lower availability widely. Thus, to address the problem, this paper provides a cost effective

solution to help the visually impaired people in face recognition, object recognition and in reading out texts easily with full depth analysis of the textual content.

LITERATURE REVIEW:

In [1], a review of the Aadhar based biometrics attendance system using wireless fingerprint terminals by using WFT's based GSM/GPRS is discussed.

In [2], the focus is to develop a small stick for the blind using IR sensor, ultrasound sensor and water sensor to detect the obstacle. This system does not use any location identifier or location indicator.

In [3], Smart Belt for Blind uses a belt embedded with ultrasound sensor which detects the obstacle is developed. The belt also has a buzzer which vibrates when obstacle is detected. The entire system is developed in such a way that the distance calculated is sent as an audio message for the blind person,
where in which he hears the distance calculated using a speaker.

EXISTING SYSTEM:

The proposed intelligent assistive system aims to reduce the chances of visually impaired people being injured from aerial obstacles during walking and alert them from falling. On the other hand, when a visually impaired person falls, the system will also automatically send an urgent notification to the mobile phones of relevant persons (such as family members or caregivers). The proposed assistive system is composed of a pair of wearable smart glasses, an intelligent walking stick, a mobile device app (named V-Protector), and a cloud-based information management platform. The proposed wearable smart glasses are used to detect aerial obstacles. When aerial obstacles in front are detected via the proposed wearable smart glasses, the proposed intelligent walking stick will vibrate to notify and guide visually impaired people to avoid those obstacles.

Fig:1 Distance detection of aerial obstacles

PROPOSED SYSTEM:

The proposed system comprises of three main methods in which we can guide the blind people to survive in the real world.

Object Recognition: Object Recognition is an important process which will aid visually impaired persons to locate their frequently used day to day objects and measure the distance. . Work process for execution of item identified model is clarified in Fig. 3 first raspberry pi is refreshed. Subsequent stage is to introduce conditions for pi camera, at that point it is expected to establish climate. A climate is made to evade adaptation intricacies and to disengage bundle establishment from the framework. In that climate introduce Tensor Flow and open CV. The following stage is to set Tensor Flow model with dataset and last yet significant advance is test results. Picture catching is finished with the assistance of Web camera or pi cam. The model takes input picture. It is required to have picture with 300x300 pixels and there are 3 channels for each pixel (Red, Green, Blue). An object discovery model can recognize which of a known arrangement of articles may be available and give data about their situations inside the picture. The distinguished item model has smoothed support of 270,000 byte esteems (300x300x3) and model is quantised addressing an incentive between 0 to 255.

Open CV library is utilized for constant PC vision created by Intel, incorporates measurable AI library which contains SVM(support vector machine), DNN(Deep neural organization), K- NN, innocent neural organization and so on utilized for some, ongoing applications like feeling acknowledgment, face acknowledgment, object location, portable mechanical technology, movement following and so on allude area 1 for Tensor Flow subtleties.

Text-to-Speech: This module comprises of image and speech processing. The real image of any text constraints area and to convert this image into text, followed by providing audio output using speech processing. Here they proposed a camera-based assistive system to assist dazzle people with perusing text marks from chamber objects in their everyday life. To begin with, the article is identified from the foundation or other encompassing items in the camera see by shaking the item. At that point we propose a mosaic model to open up the content name on the chamber object surface and remake the entire mark for perceiving text data. This model can deal with chamber objects in any directions and scales. The content data is then removed from the opened up and flatted marks. The perceived content codes are then yield to dazzle clients in discourse. Trial results show the productivity and viability of the proposed system from various chamber objects with complex foundations. Here they proposed a camera-based assistive system to assist dazzle people with perusing text names from chamber objects in their day by day life. In the first place, the article is identified from the foundation or other encompassing items in the camera see by shaking the article. At that point they proposed a mosaic model to unwarp the content mark on the chamber object surface and recreate the entire name for perceiving text data. This model can deal with chamber objects in any directions and scales. The content data is then removed from the unwrapped and flatted names. The perceived content codes are then yield to dazzle clients in discourse. Trial results show the proficiency and adequacy of the proposed structure from various chamber objects with 3rcomplex foundations.

Face recognition: Some face recognition algorithms identify facial features by extracting landmarks, or features, from an image of the subject's face to determine the known persons. The Face and Interaction Models address the models utilized for facial and social cooperation recognition, separately. Practically speaking, each are prepared once, before framework use, and seldom refreshed. The Acquaintance Model, in its present structure, is essentially a face acknowledgment model, and is refreshed oftentimes. While associates are perceived progressively per the green work process, the current work performs Interaction Detection, and the resulting client naming of sound subsamples for the normal refreshing of the Acquaintance Model. We set out to plan a wearable FR gadget that can learn and help with a (possibly visually impaired) wearer's social co-operations. Its expected utility is to subtly advise the wearer about the presence regarding close by associates. Every situation necessitates that the gadget have the option to precisely recognize associates from non-colleagues. The gadget can convey data to the wearer in an ideal and private way as a complete name. Warning of complete names is cultivated by communicating a sound message over headphone. Recognizable proof of colleagues is taken care of by face identification and acknowledgment. The first API (application convention interface) gave in IRU gadget permits us to catch pictures. Initially, Open CV face indicator is applied to discover faces in the approaching pictures. It is vigorous in discovering frontal appearances, as

it is prepared with an immense number of preparing tests. The Open CV indicator can distinguish the faces (frontal faces) in the stances of taking a gander at the camera. Face identifier which is prepared by Haar Cascade Classifier are applied to discover faces in the info picture outline.

METHODOLOGY:

Smart assistive system design depends mainly on the processing unit, which is the raspberry pi. A raspberry pi camera was used for image acquisition. It was connected to the raspberry pi using a flex cable and was fixed on the top middle of the glasses for optimal
image capturing. The raspberry pi has an audio port which connects to an earpiece. The raspberry pi GPIO port was configured to receive input from push button switches.

To identify the text easier the reading material is placed within custom designed frame with red borders. The general principle of operation for such glasses is by giving instructions via switches and listening to the output through an earpiece. Similarly in this case, the user starts the task mode by a push of the button.

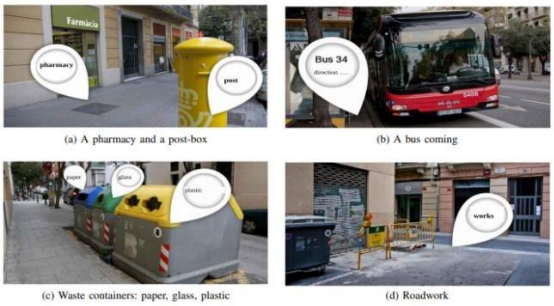

(a) A pharmacy and a post-box (b) A bus coming

(c) Waste containers: paper, glass, plastic (d) Roadwork

Fig: 2 A possible application scenario of the proposed intelligent assistive system.

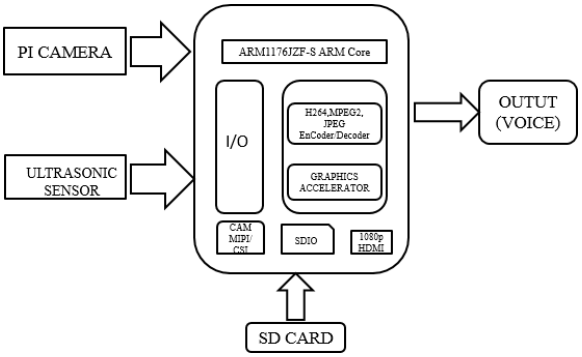

Fig:3 Block diagram of smart assistive system

HARDWARE:

Raspberry pi:

It is a series of small single board computers developed in the United Kingdom by the Raspberry Pi Foundation in association with Broadcom. It is a credit card sized computer that plugs into a computer monitor or a television and
uses a standard keyboard and mouse. The Image processing is basically a set of functions that is used upon an image format to deduce some information from it. The input is an image while the output can be an image or set of parameters obtained from the image. Raspbian is the recommended operating system for normal use on a Raspberry Pi. Raspbian is a free operating system based on Debian, optimized for the Raspberry Pi hardware.

Fig: 4 Raspberry pi module

Web Cam:
It is a portable light weight camera that supports Rasperry Pi. It communicates with Pi using the MIPI camera serial interface protocol. It is normally used in image processing, machine learning or in surveillance projects.

Fig: 5 Web camera

Ear Phone:
The ear phone plays a major role in delivering the audio commands to the blind person via commands from the visuals obtained by web cam by the controller

Fig: 6 Earphones to receive the audio

Ultrasonic sensor:
This sensor senses the obstacles within few meters of range. There is a pair of eyes, Transmitter and Receiver. Transmitter transmits pulse signals with velocity v and Receiver receives the transmitted signals after time t (this is called Time of Flight).So, the distance will be (v*t)/2.

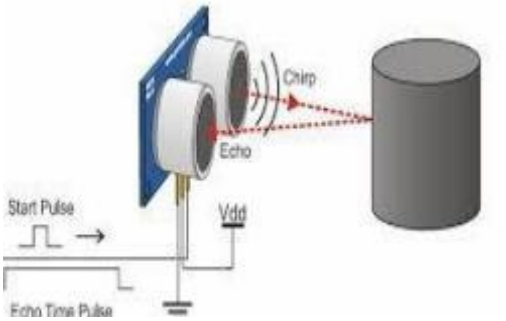

Fig:7 Working of ultrasonic sensor

CONCLUSION
Thus, the project helps in identifying the obstacles along with distance, so that the visually impaired can analyse the distance and can perform his action. The audio commands helps them in recognizing an object and in recognizing the person standing infront of them. And with the help of the translation tools he can convert the text to the desired language and then again by using the Google speech recognition tool he can convert that changed text into voice. By that they can be independent. And it is less cost compared to other implementations.

FUTURE SCOPE
In future there is a scope for it can also extend for the long distance capturing, and it can also implement for vertical reading of the image. The device will change the life of blind people to live a better life than before.

REFERENCES:
[1] Yelamarthi, K., Haas, D., Nielsen, D., & Mothersell, S. (2010, August). RFID and GPS integrated navigation system for the visually impaired. In Circuits and Systems (MWSCAS), 2010 53rd IEEE International Midwest Symposium on (pp. 1149-1152). IEEE.
[2] Zubaľ, M., Lojka, T., & Zolotová, I. (2016, January). IoT gateway and industrial safety with computer vision. In Applied Machine Intelligence and Informatics (SAMI), 2016 IEEE 14th International Symposium on (pp.183-186).

IEEE.

[3] Walsh, R., & Hornsby, A. (2011, January). Towards off-the-shelf computer vision for user interaction in consumer homes. In Consumer Electronics (ICCE), 2011 IEEE International Conference on (pp. 121-122). IEEE.

[4] Mekhalfi, M. L., Melgani, F., Bazi, Y., & Alajlan,N.(2015). A compressive sensing approach to describe indoor scenes for blind people. IEEE Transactions on Circuits and Systems for Video Technology, 25(7), 1246-1257.

[5] Hub, A., Diepstraten, J., & Ertl, T. (2004, October). Design and development of an indoor navigation and object identification system for the blind. In ACM Sigaccess Accessibility and Computing (No. 77-78, pp.147-152). ACM.

[6] Eyes of things(IEEE 2017) by Noelia Vallez,THALES Communications & Security, 4 Avenue des Louvresses, 92230 Gennevilliers, France

[7] Camera based analysis of text and documents by Jian Liang, David Doermann . In Proceedings of the IEEE International Conference on Robotics and Automation, 2004.

[8] Context-based Indoor Object Detection as an Aid to Blind Persons Accessing Unfamiliar Environments by Xiaodong Yang, Yingli Tian from The city of newyork, USA. . IEEE Trans PAMI 24(9):1167–1183.

[9] Reading labels of cylinder objects for blind persons by Ze Ye, Chucai Yi and Yingli Tian. Dept. of Electrical Engineering, The City College of New York,The City University of New York, USA.e- mail: zye01 @ccny.cuny.edu.

[10] Blind people guidance system by Ljupko simunovic,Velimir Andelic, Ivan Pavlinusic at Central European conference on information and intelligent system.

[11] Auditory Feedback and Sensory Substitution During Teleoperated Navigation by Rong Liu, Member, IEEE, and Yong-Xuan Wang

Smart Surveillance and Alert Network Using Deep CNNS for Preventing Animal Attacks

[1] Mr.V.Deepak, [2] B.Aswin kumar, [3] T.Bharath, [4] P.Joyal Pious, [5] M.Praveen kumar

[1] Assistant professor, Department of Electronics and Communication Engineering, Nandha college of Technology, Tamilnadu, India
[2,3,4,5] UG scholar, Electronics and Communication Engineering, Nandha college of Technology, Tamilnadu, India

Abstract - In many real-life applications animal detection-based researches are very essential. Methods for animal detection are helpful to know about the moving behavioral of targeted animal and to prevent animal intrusion that result dangerous situations in forest border area.

Here we use raspberry pi programmed with set of code where the camera module is used that captures the animal near the field by Yolo (You only look once) algorithm. The captured image of the animal is analyzed with the data fetched in the program. An alert system is used that sends the warning message to the mobile phone and an animal replant system is used to avoid further invasion of the animals..

Keywords--- deep learning, convolutional neural networks, large scale image classification, animal recognition, wildlife monitoring, citizen science

INTRODUCTION

Human animal conflict creates lot of negative impact for both human and wild animal. Injury and loss of life of humans and wildlife, damage to human property, crop damage, destruction of habitat is some of the main impact of these conflict. Deforestation is the reason responsible for the wild animals to move into the human areas. Massive forest areas are the animals prey base and the corridors of their natural movement, they are now encroached upon by humans so the animals are plunging into human habitats in search of food and water.

So, there is a need of developing a system which detect presence of interactions of wild animal near the human habitat and without causing any harmful effect to human being and wild animal.

This project covers various perspective of the design of such systems, including image processing and artificial intelligence for animal detection, species classification, design of alarm unit and animal repellent circuit.

LITERATURE REVIEW:

[1] V. Mitra, C. Jiu Wang, and G. Edwards, “Neural network for LIDAR detection of fish,”

[2] Y. Oishi and T. Matsunaga, “Automatic detection of moving wild animals in airborne remote sensing images”

[3] D. Tahmoush and J. Silvious, Modeled gait variations in human micro-Doppler.

[4] S. H. Kim, D. H. Kim, and H. D. Park, “Animal situation tracking service using RFID, GPS, and sensors,”

[5] J. S. L. Ting, S. K. Kwok, W. B. Lee, H. C. A. Tsang, and B. C. F. Cheung, “A dynamic RFID-based mobile monitoring system in animal care management over a wireless network”

EXISTING SYSTEM:

The existing system uses the Normal surveillance cameras with motion detection

sensors that allow to capture the image or records when a movement or motions detected in the camera.

The Field or area near by forest is continuously monitored by the officers or local people through the camera and setting up traps to capture the animals

PROPOSED SYSTEM:

In this project we use Raspberry pi which is fetched with certain code for the object detection. Here the data of certain animals that often invade are stored.

The camera module is used to detect and capture the animals that are approaching which alert by the buzzers.

The alert network also sends the captured image and information to custom made bot in the telegram app using API Tokens.

In addition, harmless animal repellent is made using LEDs to distract the animals.

METHODOLOGY:

This paper presents the objective of our system status of the current situation and importunacy of implementing it to avoid the wild animal attacks on the agricultural lands and people near by the forest areas. This setup is made far from the actual distance to ensure the safety. Here we use deep convolutional neural network architectures with Yolo algorithm (You only look once), fetched in raspberry pi to train a computational system capable of filtering animal images and identifying species automatically by a camera module .

We use sirens and leds to alert the locals near the area, this also act as an animal repellent that doesn't harm any wild life. We connect the raspberry pi with mobile phone through API(application program interface) tokens, that allow us to view and surveillance any time anywhere. The alert messages are made such a way that send the picture and details of the animal detected in the camera.

This system consumes low power when compared to existing system also it is so reliable in the current scenario.

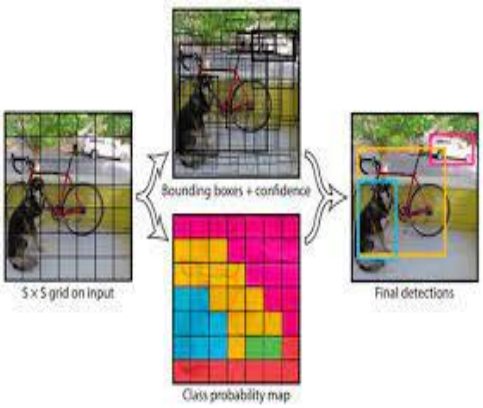

BLOCK DIAGRAM:

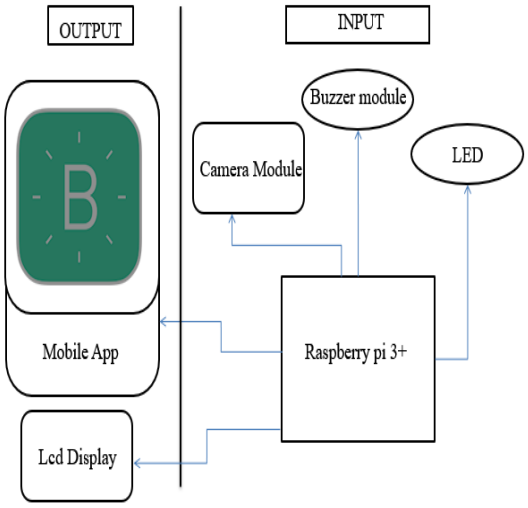

Fig. Block diagram

HARDWARE AND SOFTWARE:

Raspberry pi:

The Raspberry Pi is a low cost, credit-card sized computer that plugs into a computer monitor or TV, and uses a standard keyboard and mouse. It is a capable little device that enables people of all ages to explore computing, and to learn how to program in languages like Scratch and Python.

Fig. Raspberry pi

Relay module:
A power **relay module** is an electrical switch that is operated by an electromagnet. The electromagnet is activated by a separate low-power signal from a micro controller. When activated, the electromagnet pulls to either open or close an electrical circuit.

Fig. Relay module

Camera module:
The v2 **Camera Module** has a Sony IMX219 8-megapixel sensor (compared to the 5-megapixel OmniVision OV5647 sensor of the original **camera**). The **Camera Module** can be used to take high-definition video, as well as stills photographs.

Fig. Camera module

Buzzer module:
An Active Buzzer Alarm Module is an audio signaling device, which may be mechanical, electromechanical, or piezoelectric. Typical uses of buzzers include alarm devices, timers, and confirmation of user input such as a mouse click or keystroke.

Fig. Buzzer Module

LCD display:
An LCD (Liquid Crystal Display) screen is an electronic display module and has a wide range of applications. A 16x2 LCD display is very basic module and is very commonly used in various devices and circuits. A 16x2 LCD means it can display 16 characters per line and there are 2 such lines. In this LCD each character is displayed in 5x7 pixel matrix. The 16 x 2 intelligent alphanumeric dot matrix display is capable of displaying 224 different characters and symbols. This LCD has two registers, namely, Command and Data.

Fig. Lcd Display

BLYNK app:
Blynk is a hardware agnostic IoT platform with white-label mobile apps, private clouds, device management, data analytics, and machine learning. Blynk is a hardware-agnostic IoT platform with white-label mobile

apps, private clouds, device management, data analytics, and machine learning. The software used here is KLC software.

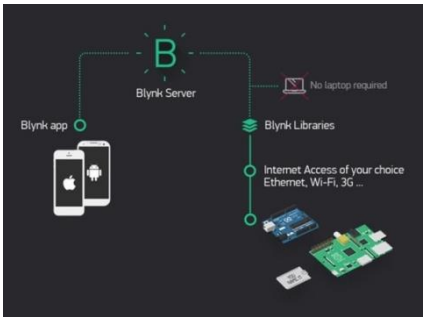

Fig. BLYNK APP

CONCLUSION:

To solve the problem of farmer and people near the forest side we have designed a smart earlier detection and protection system with the help of IOT. The main aim is to prevent the loss of corps and protect agricultural forming area from wild animals which causesmajor damage to the agricultural area.

As the detection of presence of animals near the forest boarder its very helpful to take early precautions. So our technical approach will be helpful to the farmers in protecting fields and save them from financial losses and also saves them from unproductive efforts that they endure for the protection of their fields.

FUTURE SCOPE:

We can enhance to a wide range areawith additional effective sensors. The proposed system is only limited for a village surrounded area that is near to the forest area.

In future we can enhance the to a wide range area also with additional effective sensors.

REFERENCES:

[1] P. M. Vitousek, H. A. Mooney, J. Lubchenco, and J. M. Melillo, “Human domination of Earth’s ecosystems,” Science, vol. 277, no. 5325, pp. 494– 499, 1997.

[2] G. C. White and R. A. Garrott, Analysis of wildlife radio-tracking data. Elsevier, 2012.

[3] R. Szewczyk, A. Mainwaring, J. Polastre, J. Anderson, and D. Culler, “An analysis of a large scale habitat monitoring application,” in Proceedings of the 2nd International Conference on Embedded Networked Sensor Systems, 2004, pp. 214–226.

[4] B. J. Godley, J. Blumenthal, A. Broderick, M. Coyne, M. Godfrey, L. Hawkes, and M. Witt, “Satellite tracking of sea turtles: Where have we been and where do we go next?” Endangered Species Research, vol. 4, no. 1-2, pp. 3–22, 2008.

[5] I. A. Hulbert and J. French, “The accuracy of GPS for wildlife telemetry and habitat mapping,” Journal of Applied Ecology, vol. 38, no. 4, pp. 869–878, 2001.

[6] R. Kays, S. Tilak, B. Kranstauber, P. A. Jansen, C. Carbone, M. J. Rowcliffe, T. Fountain, J. Eggert, and Z. He, “Monitoring wild animal communities with arrays of motion sensitive camera traps,” arXiv:1009.5718, 2010.

[7] A. F. O’Connell, J. D. Nichols, and K. U. Karanth, Camera traps in animal ecology: Methods and Analyses. Springer Science & Business Media, 2010.

[8] A. Swanson, M. Kosmala, C. Lintott, R. Simpson, A. Smith, and C. Packer, “Snapshot Serengeti, high-frequency annotated camera trap images of 40 mammalian species in an African savanna,” Scientific Data, vol. 2, p. 150026, 2015.

[9] S. Thorpe, D. Fize, and C. Marlot, “Speed of processing in the human visual system,” Nature, vol. 381,

no. 6582, p. 520, 1996.

[10] X. Yu, J. Wang, R. Kays, P. A. Jansen, T. Wang, and T. Huang, "Automated identification of animal species in camera trap images," EURASIP Journal on Image and Video Processing, vol. 2013, no. 1, pp. 1–10, 2013.

[11] G. Chen, T. X. Han, Z. He, R. Kays, and T. Forrester, "Deep convolutional neural network based species recognition for wild animal monitoring," in Proceedings of the IEEE International Conference on Image Processing (ICIP), 2014, pp. 858–862.

[12] A. Gómez, A. Salazar, and F. Vargas, "Towards automatic wild animal monitoring: Identification of animal species in camera-trap images using very deep convolutional neural networks," arXiv:1603.06169, 2016.

[13] J. Deng, W. Dong, R. Socher, L.-J. Li, K. Li, and L. Fei-Fei, "ImageNet: A large-scale hierarchical image database," in Proceedings of the IEEE Conference on Computer Vision and Pattern Recognition (CVPR), 2009, pp. 248–255.

[14] O. Russakovsky, J. Deng, H. Su et al., "ImageNet large scale visual recognition challenge," International Journal of Computer Vision, vol. 115, no. 3, pp. 211–252, 2015.

[15] N. Pinto, D. D. Cox, and J. J. DiCarlo, "Why is real-world visual object recognition hard?" PLOS Computational Biology, vol. 4, no. 1, p. e27, 2008.

[16] C. M. Bishop, "Pattern recognition," Machine Learning, vol. 128, pp. 1–58, 2006.

[17] Y. LeCun, B. Boser, J. S. Denker, D. Henderson, R. E. Howard, W. Hubbard, and L. D. Jackel, "Backpropagation applied to handwritten zip code recognition," Neural Computation, vol. 1, no. 4, pp. 541–551, 1989.

[18] K. Simonyan and A. Zisserman, "Very deep convolutional networks for large-scale image recognition," arXiv:1409.1556, 2014.

[19] C. Szegedy, W. Liu, Y. Jia, P. Sermanet, S. Reed, D. Anguelov, D. Erhan, V. Vanhoucke, and A. Rabinovich, "Going deeper with convolutions," in Proceedings of the IEEE Conference on Computer Vision and Pattern Recognition (CVPR), 2015, pp. 1–9.

[20] A. Krizhevsky, I. Sutskever, and G. E. Hinton, "ImageNet classification with deep convolutional neural networks," in Advances in Neural Information Processing Systems, 2012, pp. 1097–1105.

[21] K. He, X. Zhang, S. Ren, and J. Sun, "Deep residual learning for image recognition," in Proceedings of the IEEE Conference on Computer Vision and Pattern Recognition (CVPR), 2016, pp. 770–778.

[22] R. Collobert and J. Weston, "A unified architecture for natural language processing: Deep neural networks with multitask learning," in Proceedings of the 25th International Conference on Machine Learning (ICML), 2008, pp. 160–167.

[23] J. Gehring, M. Auli, D. Grangier, and Y. N. Dauphin, "A Convolutional Encoder Model for Neural Machine Translation," arXiv:1611.02344, 2016.

[24] J. Gehring, M. Auli, D. Grangier, D. Yarats, and Y. N. Dauphin, "Convolutional Sequence to

Sequence Learning," ArXiv e-prints, 2017.

[25] D. Ciregan, U. Meier, and J. Schmidhuber, "Multi-column deep neural networks for image classification," in Proceedings of the IEEE Conference on Computer Vision and Pattern Recognition (CVPR), 2012, pp. 3642–3649.

[26] M. Abadi, A. Agarwal, P. Barham, E. Brevdo, Z. Chen, C. Citro, G. S. Corrado, A. Davis, J. Dean, M. Devin et al., "TensorFlow: Large-scale machine learning on heterogeneous distributed systems," arXiv:1603.04467, 2016.

[27] J. Yang, K. Yu, Y. Gong, and T. Huang, "Linear spatial pyramid matching using sparse coding for image classification," in Proceedings of the IEEE Conference on Computer Vision and Pattern Recognition (CVPR), 2009, pp. 1794–1801.

[28] J. Wang, J. Yang, K. Yu, F. Lv, T. Huang, and Y. Gong, "Localityconstrained linear coding for image classification," in Proceedings of the IEEE Conference on Computer Vision and Pattern Recognition (CVPR), 2010, pp. 3360–3367.

[29] X. Ren, T. X. Han, and Z. He, "Ensemble video object cut in highly dynamic scenes," in Proceedings of the IEEE Conference on Computer Vision and Pattern Recognition (CVPR), 2013, pp. 1947–1954.

[30] D. M. Blei, A. Y. Ng, and M. I. Jordan, "Latent Dirichlet allocation," Journal of Machine Learning Research, vol. 3, pp. 993–1022, 2003.

[31] L. Fei-Fei and P. Perona, "A Bayesian hierarchical model for learning natural scene categories," in Proceedings of the IEEE Conference on Computer Vision and Pattern Recognition (CVPR), 2005, pp. 524–531.

[32] A. Gomez, G. Diez, A. Salazar, and A. Diaz, "Animal identification in low quality camera-trap images using very deep convolutional neural networks and confidence thresholds," in International Symposium on Visual Computing, 2016, pp. 747–756. Rosenberg, and J. Shirk, "Citizen

Some Studies on Surface Defect Detection using Deep Learning Algorithm

[1] Mrs Muppudathi Sudha S, [2] Priya Dharshini T, [3] Raga Priya M

[1,2,3] Department of Electronics Communication Engineering, Sardar Raja College Of Engineering, Tamil Nadu, India
Email: aathira.sms@gmail.com

Abstract - This paper presents the development and application of image analysis and computer vision system in defect detection of ceramic tiles. Quality control is an important issue in the ceramic tile industry. For the ceramic tile industry maintaining quality is more important, bulk amount of ceramic tiles are manufactured; it is very difficult to monitor the quality of each and every tile manually. Lot of human resources is required for the defect detection of the tiles. The proposed method consists two basic steps. The first step is preprocessing the image. Preprocessing operation consists image acquisition, image enhancement, noise reduction, edge detection. In second step, we applied proposed flaw detection technique on tiles image to verify whether the tiles is faulty or not.In this study, we use deep learning CNN(Convolutional Neural Network) with Xception architecture to detect steel defects from images taken from high-frequency and high-resolution cameras.

Keywords--- Quality control, Image Acquistion, Image Enchancement, Noise Reduction, Edge Detection, CNN, Xception Algorithm

INTRODUCTION

Three types of defects detect from the surface defect detection method. These types of defects are shown in the following Table. As the price of ceramic tiles depend on its limpidness and precision of surface texture, color and shape, it's in fact a great challenge to control surface eminence and uphold production rate in the field of industrial fabrication of ceramic tiles. Under consideration these criteria, an enhanced automatic surface flaw detection and categorization procedure that is able to guarantee the quality of ceramic tiles as well as production rate in industrial fabrication. The proposed model plays an important role for automatic revealing of surface flaw during production and packaging. This proposed model includes an automatic categorization technique using computer vision that helps us to make sense about the pattern of surface defect within a very short time and also helps to make quick decision about the recovery process. Objective of this project is to propose an efficient surface flaw inspection and categorization procedure which will be able to uncover the surface defects of ceramic tiles at a high rate within a dumpy time. We generally have found total: Table 1. Defects present in ceramic tiles.

Name of defect	Description
Crack	Breakdown of tile
Blob	Water drop spot on tile surface
Pinhole	Scattered isolated black-white pinpoint spot

Although automated defect detection method have been deployed in ceramic tiles industries since few years but there still have complex procedure to classify defects using human vision i.e. automated classification and grading mechanism of packing have not been implemented yet. In fact, most inexperienced observers have the same opinion that the flaw may have still there, when they cannot classify

the structure of tiles properly. Such a monitoring task is naturally wearisome, prejudiced and costly in terms of production environment. Objective of this research paper is to propose an efficient surface flaw inspection and categorization procedure which will be able to uncover the surface defects of ceramic tiles at a high rate within a dumpy time.

LITERATURE SURVEY

Since last decade, some defect inspection mechanisms have been proposed to identify the surface flaw of industrial products (i.e. ceramic tiles, steel bar and wooden surface) by capturing their real time surface image. Their proposal can be described briefly as follows:

Elbehiery et.al. , proposed a method to identify the surface flaw of ceramic tiles. Their proposed method is divided into two distinct portions. First portion of this method consist with the captured image of tiles as input and output of this portion is histogram equalized image with intensity adjustment. After that, they use the output of first portion as input for the second portion. Furthermore, second portion also comprises with different complementary image processing operations so as to identify and to classify a variety of surface and structural defects. Their proposed system is not automated rather it emphasizes on the human visual inspection of defect classification in industrial environment. Moreover, this system is suffered by redundant operation since they apply the second portion on every test image to identify and classify various types of defects. Thus this system is time consuming as well.

Boukouvalasetal, they applied separable line filters for flat tiles to identify crack and pinhole defects. Again, they applied winger distribution for crack detector and a novel conjoint spatial-spatial frequency representation for textured tiles. In terms of color textured tiles, this type of detection algorithm which looks for abnormalities both in chromatic and structural properties. However, use of separate filtering technique for identifying distinct defect is not a good practice.

Consequently, high computational time is taken while we are to handle a large number of operations during production time. It also proceeds with visual defect classification with human intervention.

Applied a real time mechanism for surface flaw detection of steel coil and bar in high speed production environment. They used a scheme named “edge preservation” for noise cutback and performance improvement. In addition, they used “second derivative Laplacian” filter to differentiate gray scale images from each other. Finally, they applied “double thresholding” technique to formulate binary images. Still, this type of technique is unable to find the orientation of the edge of surface, because they use “second derivative laplacian” filter which malfunctions for corner and curves flaw detection as well . In contrast, they hadn’t developed any automatic classification mechanism rather it was also a human vision process to classify the surface flaw. After thoroughly revision of previous research paper, there may exists eight types of defects which may occur during production time and/ or packaging time.

METHODOLOGY FOR DEFECT DETECTION AND CLASSIFICATION

3.1 Introduction

A new surface defect detection and classification method has been proposed by this section. Our proposed method consists of two major portions. One includes some pre-processing image operations to contrast features. And another portion includes some prominent feature extraction operations to

identify defects and to classify those defects as well. Our proposed model also introduces several algorithms by which we can boost up the system performance at a higher rate than existing one during production time. Thus it also can reduce the computational time all together. Here, we applied our mechanisms step-by-step on ceramic tiles image which is captured before by a digital camera.

3.1.1 Performing Some Image Preprocessing Operations

Earlier than applying our proposed defect detection method, initially, we must make use of several image preprocessing operations on the input images. Pre-processing operations include RGB to Binary conversion, image enhancement, noise reduction etc. Pre-processing operations are imperative for renovating the captured RGB image.

1. Image Acquisition

Image acquisition is the process of obtaining a digitized image from a real world source. Each step in the acquisition process may introduce random changes into the values of pixels in the image which is referred to as noise. A ceramic tile image is captured and stored into the computer for further processing. Then, this image is trimmed with m × n (width and height) to make all the images to equal size.

2. Image Enhancement

O(x,y) = (I(x,y)-min) (nt/max-min)+i

Where, O(x,y) represents the output image, I(x,y) represents the pixel position in input image. In this equation, ni correspond to the number of intensity levels, i stand for the initial intensity level, "min" and "max" represent the minimum intensity value and the maximum intensity value in the current image respectively. Here "no. of intensity levels" refers the total number of intensity values that can be assigned to a pixel. For example, normally in the gray-level images, the lowest possible intensity is 0, and the highest intensity value is 255. Thus "no. of intensity levels" is equal to 256. The contrast stretching operation is applied on the grayscale images in two passes. In the first pass the algorithm calculates the minimum and the maximum intensity values in the image, and in the second pass through the image, the above formula is applied on the pixels. In the proposed method, we enhance the gray level image to improve its visual quality and machine recognition accuracy using the following formula,

G=INTRANS(F’,stretch’,M,e)

Here, performs the intensity or gray level transformations and G computes a contrast stretching transformation using the following MATLAB expression:

contrast=1./(1+(M./F+eps)).^E)

Where, parameter M must be in range [0,1]. The default value for M is and the default value for E is 4. Here, F is gray-level image and M is such result which is found by applying image double and median filtering operation on F. eps returns the distance from 1.0 to the next largest double-precision number, i.e.

eps=2^(-52)

C) Noise Reduction:

A. Consider each pixel in the image.
B. Sort neighboring pixels into order based upon their intensities.
C. Replace the original value of the pixel with the median value from the list.

Median filter technique is good at removing salt and pepper noise from an image, and also causes relatively little blurring of edges, and hence is often used in computer vision applications.

D) Edge Detection:

Every edge extraction techniques are consists of two distinct phases:

A. Finding pixels in the image where edges are likely to occur by looking for discontinuities in gradients.
B. Linking these edge points in some way to produce descriptions of edges in terms of lines and curves.

For the proposed method, we detect edge using sobel edge detection method upon the resulting image.

APPLYING THE PROPOSED DEFECT DETECTION PROCESS

4.1 Image Preprocessing Steps: Method I:

All preprocessing operations are applied to the reference image, stored in the computer database to compare with the test image. Let, these two matrices are named as m1 and m2. Then we count the total number of black pixels (in binary, it is represented as 1) in m1 and that in m2. These two are then compared. If the number of black pixels in m1 is greater than the number of black pixels in m2 then we can make decision that defect is found in the test image, otherwise we can say that no defect is present to the test image. To understand this concept clearly, consider the following.

Let, we have a test image and a reference image of equal size. Now applying preprocessing steps on the test image we find matrix m1 whose value is

$$m1=\begin{pmatrix} 1&0&0&1&0 \\ 0&0&1&0&0 \\ 0&0&0&0&0 \\ 0&0&1&0&1 \\ 0&0&0&1&0 \end{pmatrix} \qquad m2=\begin{pmatrix} 1&0&0&0&0 \\ 0&0&1&0&0 \\ 0&0&0&0&0 \\ 0&0&0&0&0 \\ 0&0&0&0&0 \end{pmatrix}$$

Here, number of black pixels for reference image is2 and for the test image is 6. So here, no. of black pixels for test image is greater than reference image. So defect is present on the test image.

METHOD II:

In this study, two techniques will use to detect steel defects. The first technique is a binary classification that recognizes images that have defects or no defects. Besides that, the function of this binary classification for filtering defect images to the next stage. In the second technique, multilabel classification performs, which detects images that have 1 class of defects or multi-class of defects.

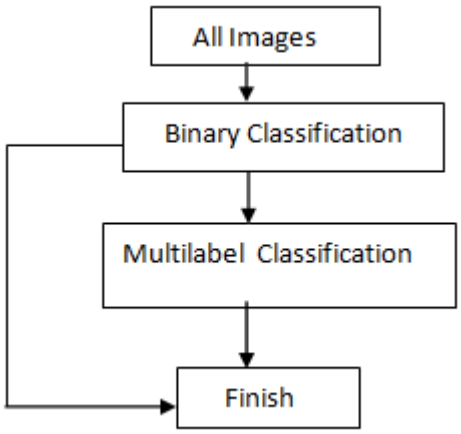

4.2 CNN Using Deep Learning:

The Deep Learning Model that commonly used for image recognition is the Convolutional Neural Network (CNN). CNN will help find defective objects contained in any surface images. Therefore, deep learning with the CNN model will use in this study to detect surface defects. There are two main block structures of CNN, namely feature extraction and classification. Feature extraction consists of convolutional layer operations and the pooling layer (sub-sampling layer).

The classification consists of fully connected layers equipped with activation functions

(softmax, sigmoid, etc.). In feature extraction, the convolutional layer is the first layer whose operation is to take an image from the input layer and then extract the image features according to the specified filter. When the convolutional layer calculation operation performed, the resulting value may be negative; therefore, the RELU activation function will use in here. The RELU activation function performs its action by changing the negative value of the feature map to zero. The next step of feature extraction is the pooling layer, which works by reducing the resulting convolutional layer's dimensions. The pooling layer consists of max pooling and average pooling, but generally, what used is max pooling.

After the feature extraction stage, it will be forward to the layer whose function is as a classification. The fully connected layer is the last layer that predicts output. The FC layer has an activation function that used to find the probability value in forecasting the classification results after the feature map has finished operating. Here, Introduced Xception Algorithm Architecture for detecting surface defect

In this study, the CNN architecture used is Xception [11] created by Francois Chollet.

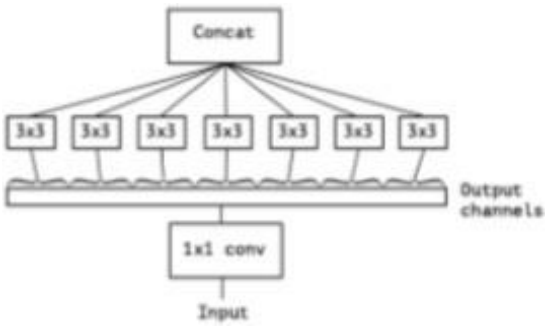

Xception consists of 36 layers that form a network for feature extraction. The Xception architecture feature map consists of 3, namely entry, middle, and exit. Each groove represents several blocks of layers supporting feature extraction. After the feature extraction block ends with the global average pooling layer, there is a fully connected layer whose usage is optional and ends with a logistic regression layer. In this case, the logistic regression layer not used, but what used is a fully connected layer consisting of global average pooling 2D layers and Dense, which shows the number of classification classes.

EXPERIMENTAL RESULTS AND DISCUSSION

The proposed system detects surface flaw both for plain and textured tiles successfully. In this section, represents the experimental result of our proposed defect inspection technique. We also classify here different types of defects found through defect detection process. Here it is needed to mention that during the production, many numbers of tiles are produced in industries at the same time of same colors, shape and pattern. So, all the tiles of one shape are compared with that particular type of standard tile while processing through the computers. To get practical realization of our proposed surface flaw detection process, we have applied the proposed procedures on a sample RGB image of flat tiles. After that we check whether there is any kind of defect exists in this test image or not by applying our proposed preprocessing operations on this sample RGB image (i.e. image enhancement, noise reduction and edge detection).

A. Test images

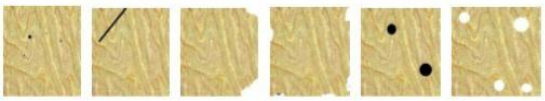

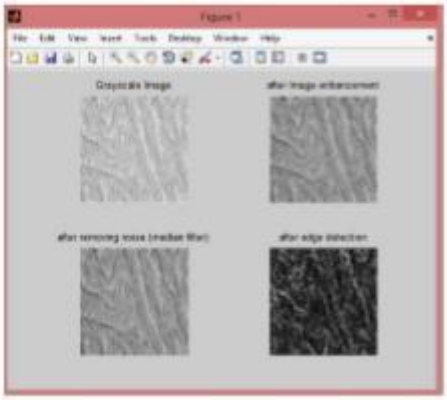

Fig 1: Result for reference image

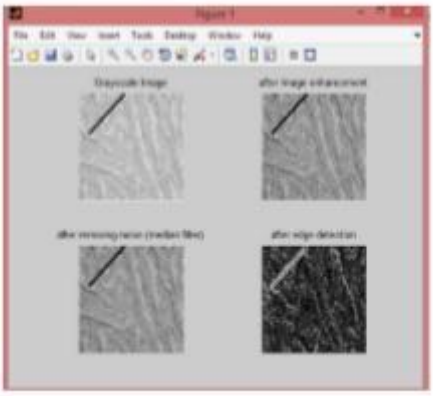

Fig 2: Result for test (crack defected) image

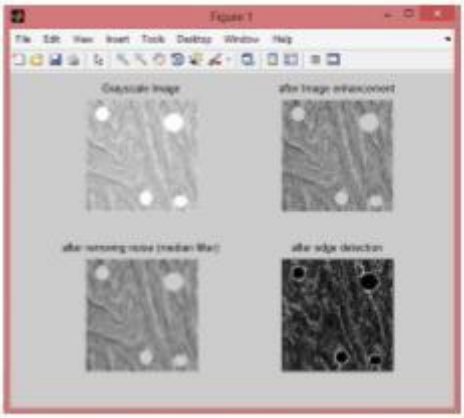

Fig 3:Result for blob defected image

Defects	Identification of defects	Computation time in second
Blob	Found	1.2429
Crack	Not Found	0.7634
Edge	Found	0.1693

B. Preprocessing Steps on Test Image Fig 1: Result for reference image Fig 2: Result for test (crack defected) image 132 | P a g e Fig 3:Result for blob defected image Fig4: Result for blob defecte d image Fig 5: Result for spot defected image Fig 6: Result for pinhole defected image

Table 2: Classification Results

Techniques	Inference Time
Binary Classification	162 minutes
Multiple Classification	52 minutes

CONCLUSION

The three kinds (crack, blob, pinhole) of defect can be classified using given method .The proposed method fails to detect the glaze and scratch faults. However, it may be future work to detect and classify the glaze and scratch faults. And also we used deep learning Algorithm for calculating Inference Time for two Classifiaction. In this case, future work may be calculation of the computational time and provide an efficient method of reducing computational time for defect classification.

REFERENCES:

[1] I. den Bakker, Python Deep Learning Cookbook. Birmingham: Packt Publishing, Puyin Liu and Hongxing Li, " Theory and Application". World Scientific

[2] H. Elbehiery, A. Hefnawy, and M. Elewa, " Defects Detection for Ceramic Tiles Using Image Processing and Morphological Techniques Proceedings of World Academy of Science, Engineering and Technology, vol 5, pp 158 1307-6884.

[3] C. Boukouvalas, J. Kittler, R. Marik, M. Mirmehdiand, and M. Petrou, "Ceramic Tile Inspection for Structural Defects", under BRITE BE5638, pp 6, University of Surrey, 2006.

[4] Se Ho Choi, Jong Pil Yun, Boyeul Seo, Young Su Park and Sang Woo

Kim, "Real Algorithm for HighSpeed Steel Bar in Coil Proceedings of World Academy of Science, Engineering and Technology, Volume 21, January 2007, ISSN 1307 6884.

[5] Mohamed Roushdi, "Comparative Study of Edge Detection Algorithms Applying on the Grayscale Noisy Image Using Morphological Filter",Volume 6, Issue 4, December, 2006

[6] Z. Hocenski, T. Keser and A. Baumgartner and efficient method for ceramic tile surface defect classification.

[7] Digital Image ", Ltd., 2005-2006. Fuzzy Neural Network. Scientific, 2004. Surface Techniques", 158-160, April 2005, ISSN Colour and ", BRITE-EURAM, project no. Real-Time Defects Detection Coil", dings 1307-GVIP Journal, 2006. Baumgartner, "A simple Efficiency (%) detection", IEEE International Symposium on Industrial Electronics (ISIE2007), Pp. 1606-1611, 4-7 June 2007.

[8] G. S. Desoli, S. Fiornvanti, R. Fioravanti and D. Corso, "A System for Automated Visual Inspection of Ceramic Tiles", Dept. of Biophysical and Electronic Engineering, Via Opera Pia 11/A 16145 Genova, University of Genoa, Italy

An Operational Lung Cancer Detection using Advanced Convolutional Neural Network

[1] Maharasi Aarthi. A, [2]Selvasuba. C, [3]Perachi. K.

[1,2] UG students, B.E-Department of Electronics and Communication Engineering, Sardar Raja College of Engineering, Alangulam, Tirunelveli, Tamil Nadu , India
[3] Assistant Professor, Department of Electronics and Communication Engineering, Sardar Raja College of Engineering, Alangulam, Tirunelveli, Tamil Nadu , India

Abstract - Lung cancer classification can be identified to the middle aged persons nowadays. Early prediction and classification of cancer stage is mandate to take counter measures to treatment and easy diagnosis. The scanned CT images are mostly used to obtain the occurrence of lung small cell cancer. In existing techniques used by machine learning traditional techniques and advanced deep learning (DL), it can classify the cancer occurrence and predict the feasible treatment based on diagnosis. It is mandate to predict and find the level or stages of the lung cancer based on tumor size and it should be properly classified to predict better treatments. Here it is proposed to categorize the stages of lung cancer and predict the diagnosis way using fully convolution neural network (FCN). In this technique, the methodology can be improved by means of candidate generation over the screening phase to make higher optimized results. The concentration leads to the learning process over the implementation of FCN to produce results with larger in dataset size. The improved results will show the performance of proposed system rather the existing works.

INTRODUCTION

Lung cancer can cause severity to the people from any gender or any age. Recent years, even the young and middle aged peoples can able to affect through this disease. At earlier 2012, the World Health Organization (WHO) collects and produces the reports as most critical cancer type among the top severe diseases like liver fungal cancer, severe gastric cancer, breast cancer, colorectal cancer and stress esophagus cancer and that leads to death because it complex to diagnose and treat the patients. Around 1.59 million of peoples are recorded as dead caused by lung cancer that the report says. In 2014, it affects more number of men compared to the women because it usually caused by chain smoking cigarette and liquor drinking. Even more, this can also be affected through the genetic disorder. As standards, the lung cancer could be classified into 4 categories; they are as Adeno carcinoma, Squamous carcinoma, tiny cell cancer and Large cell carcinomas. Usually, pathologist can able diagnose the lung cancer and their stages as traditional approach. Almost computed tomography acquisition can be used for identification. However, they diagnose as much as possible, but it may be time consuming and mislead to side effects. This can be avoided through identification of severity based on their stage of lung cancer. It can be identified and predicted through the image processing operations over the CT images. The easy and effective prediction can be done through the implementation of DL techniques. Rather than the machine learning techniques, the DL can be obtained through the large sparse set of dataset representation. It can be effectively predicted through the huge set of training samples. The shape and texture features can be extracted and used for the implementation of classification. This can be achieved through the fully Convolutional neural network (CNN) to obtain the betterment results when compared to the CNNs. In existing, we had

this same problem with the high number of convolutions over the implementations. Thus may obtained somewhat improved better results when compared to their existing works. Here, this implementation with proposed candidate generation in fully convolution neural network (FCN) with two phases such as screening and discrimination phase using the tools for detection, type based.

RELATED WORKS:

Vas M and Dessai A have used image procedure techniques to make exposure of untimely stage lung cancer. It uses the feature extraction and segmentation methods for obtaining the classification results through the Artificial Neural Networks. Likewise, in and the authors have proposed the detection mechanism using the image processing tools to obtain effective results. In the authors used the implementation effective feature extraction through the Artificial Neural Networks and also the existing works has been proposed margin based images procedure methods. To enhance the accurateness over the exposure mechanisms, the CNN techniques were implemented with the slight changes in the layers of processing works. The existing works and are used the DL technique to identified the cancer tumor in the CT image. **Kumar S et al** have proposed same DL technique with advancements in the methodology to make this fully convolution neural network. Thus the arrangement of layers can be optimized to make complications in the CNN and detect tumor more effectively and accuractely.

BACKGROUND KNOWLEDGE:

In this section, the background knowledge should be learnt and analyzed through the discussions made. Thus, the in- depth details are discussed here.

Lung Cancer Data Collection Lung cancer is a tumor like disease affected in the spongy like area of lungs and it is leading cause of cancer deaths. Lung cancer disease has probably caused by the smoking, liquor drinking and genetic disorder. This can be categorized based on the tumor cells spread in the lungs and their area. This could be majorly classified into 2 varieties. They are tiny cell lung cancer as well as non tiny cell lung cancer. Thus the non tiny cell lung cancer has categorized as Squamous carcinoma, Adeno carcinoma as well as huge cell carcinoma.

FCN:

The FCN is usual CNNs like architecture, where the end layer named fully connected layer is changed to another layer called receptive field layer. Here the discrimination analysis can be done to detect and classify the data through the large context. SYSTEM IMPLEMENTATION The figure 2 illustrated the system architecture of implementation work. Usually the images can be preprocessed before the indulging with the proposed implementation. In preprocessing process, initially the images can be converted into the gray scale to perform the image processing methods. After that the image should be denoised through Gaussian Filter to make filtered and preprocessed image. It is having the difference of usual fully convolutional neural network with the two different phases. Thus the system model consists of three sequence of different layers to make the effective classification such as convolution phase, screening phase and discrimination phase. It can be divided into three important phases after that the preprocessing technique. In first phase, the convolution layer can be done. In this phase, the sub-sampling and convolution processes are done with the variations in the pixel size. In screening phase, it cats as a decoder and also score volume also calculated here to make candidate generation. Finally, in

discrimination phase, the lung cancer tumor can be detected and stage can be classified through the fine and coarse segmentation.

Algorithm: Proposed FCN based lung classification

- Initiate with input image I
- Preprocess the image I with two main processes
- Convert the image I into Ig as gray scale
- Denoise the image Ig as In using Gaussian Filter.
- Apply convolution phase with these attributes
  a. Perform 3 x 3 convolution with different 32, 64, 128, 256 ReLU functions
  b. Perform 2 x 2 Max Pooling as sub sampling
- Applying Screening phase
  a. Perform 32 x 32 transpose convolution
  b. Prevents the over-fitting
- Apply discrimination phase
  a. Select the convolution coordinates from previous input
  b. Computes the class scores
  c. Matching with the 1-D array of size
  d. Define the classes from the array
  e. Detection of stages through the variations in pixels

Thus the above algorithm is used to perform the effective classification of lung cancer with three different phases. To improve the efficiency the transpose convolution matrix attributes can be hiked and array classes can be accurately defined and stages are detected.

EXPERIMENTS AND DISCUSSIONS

Thus the image classification mostly done through the implementation of husband proposed and enhanced fully convolution neural networks. This can be implemented through the OpenCV image processing packages. This implementation obtains the score volume for the detection and classification of the tumor through the screening phase.

This process of screening should also denote as candidate generation for the classification analysis. Then the score volume can be denoted at the positive regions through the yellow shown in above figure. Also discussing the figure 4.b. there is no possibility of candidate generation so that it would not have the identification of tumors in that image. This would be considered as the coarse segmentation of the tumors in the images.

CONCLUSIONS

In this paper, we learn the FCN with the conversion and arrangement of layers. Thus the lung cancer tumor can be identified through this technique and also obtained the effective and accurate classification of stages of cancer. The CT images are used and also training samples can be identified. Even though the increase of training samples, itwill give more accurate results over the detection methodology. In future, the optimization technique will used to improve the effectiveness of the detection and classification mechanism. Even more the treatment prediction will also identify in further improvements.

REFERENCES:

[1] Potghan, S., Rajamenakshi, R., & Bhise, A., ―Multi-Layer Perceptron Based Lung Tumor Classification‖, 2018 Second International Conference on Electronics, Communication and Aerospace Technology (ICECA).

[2] Kumar, S., Negi, A., Singh, J. ., & Verma, H, ―A Deep Learning for Brain Tumor MRI Images Semantic Segmentation Using FCN‖, 2018 4th International Conference on Computing Communication and Automation (ICCCA), July 2019, India.

[3] Akcay, S., Kundegorski, M. E., Willcocks, C. G., & Breckon, T. P.

(2018),
[4] ―Using Deep Convolutional Neural Network Architectures for Object Classification and Detection within X-Ray Baggage Security Imagery‖, IEEE Transactions on Information Forensics and Security, Vol.13, No.9, pp.2203–2215.
[5] Tafti, A. P., Bashiri, F. S., LaRose, E., & Peissig, P., ―Diagnostic Classification of Lung CT Images Using Deep 3D Multi-Scale Convolutional Neural Network‖, 2018 IEEE International Conference on Healthcare Informatics (ICHI), 2018.
[6] Kulkarni, A., & Panditrao, A, ―Classification of lung cancer stages on CT scan images using image processing‖, 2014 IEEE International Conference on Advanced Communications, Control and Computing Technologies, January 2015, India. [6] CENGIL, E., & CINAR, A., ―A Deep
[7] Learning Based Approach to Lung Cancer Identification‖, 2018 International Conference on Artificial Intelligence and Data Processing (IDAP), January 2019, Turkey.
[8] Taher, F., Werghi, N., & Al-Ahmad, H. ―Rule based classification of sputum images for early lung cancer detection‖, 2015 IEEE International Conference on Electronics, Circuits, and Systems (ICECS) March 2016, Egypt.
[9] Vas, M., & Dessai, A., ―Lung cancer detection system using lung CT image processing‖, 2017 International Conference on Computing, Communication, Control and Automation (ICCUBEA), September 2018, India.
[10] Potghan, S., Rajamenakshi, R., & Bhise, A.,―Multi-Layer Perceptron Based Lung Tumor Classification‖, 2018 Second International Conference on Electronics, Communication and Aerospace Technology (ICECA), October 2018, India.
[11] Tafti, A. P., Bashiri, F. S., LaRose, E., & Peissig, P. (2018). Diagnostic Classification of Lung CT Images Using Deep 3D Multi-Scale Convolutional Neural Network. 2018 IEEE International Conference on Healthcare Informatics (ICHI), July 2018, USA.
[12] Anifah, L., Haryanto, Harimurti, R., Permatasari, Z., Rusimamto, P. W., & Muhamad, A. R., ―Cancer lungs detection on CT scan image using artificial neural network backpropagation based gray level co-ocurrence matrices feature‖, 2017 International Conference on Advanced Computer Science and Information Systems (ICACSIS),

Surveillance in Post-Pandemic Life and Automated Health Monitoring For Covid-19 by IoT

[1] Dr.R.Jayanthi, [2]N.S.Bharath, [3]V.Mahasri, [4]C.R.Mythreyan, [5]P.Premkumar

[1] Professor and Department of Electronics and Communication Engineering, Electronics and Communication Engineering, Nandha College of Technology, Tamil Nadu, India
[2,3,4,5] UG Scholar, Electronics and Communication Engineering, Nandha College of Technology, Tamil Nadu, India

Abstract - The main objective is to monitor a person's health parameters and maintaining physical distance of 2m (or 6ft), which is a key factor controlling virus spread and analyze the environmental situation by using IoT based application. In this method, we present a suitable application for monitoring the healthcare and physical distance in pandemic situations by using Internet of Things (IoT). By using this application, we can measure the health parameters, including body temperature, pulse rate and blood oxygen saturation, then updates the user's health condition. It can measure the environmental risk and user health conditions to predict the risk of spreading infection in real time. The environmental risk conveys from the virtual zone concept and provides updated information for different places. The required energy usage and bandwidth (BW) are compared for various event scenarios. The COVID-SAFE framework can assist in minimizing the corona-virus exposure risk.

Keywords---Automated health monitoring, Physical distance monitoring, post-pandemic life, IoT based system, bio-medical communication, Artificial intelligence, wireless LAN

INTRODUCTION

Currently, the primary usage of the IoT in healthcare can be categorized as remote monitoring and real-time health systems. COVID-19 causes respiratory symptoms and appears to be more contagious in comparison to SARS in 2003. One way to control the spread of viruses, until a vaccine is available, is to observe physical(or social) distancing. We present a potential application of the Internet of Things (IoT) in healthcare and physical distance monitoring for pandemic situations. By implementing better system for surveillance, healthcare, and transportation, contagious diseases will have less chance of spreading. An IoT system, the distance between people can provide valuable information. An IoT for healthcare is typically composed of many sensors connected to a server, it gives real- time monitoring of users.

LITERATURE REVIEW:

During these days, IoT has become an important part in all electronic systems, especially in health monitoring too. Recently, in a method where, an IoT framework is presented to monitor participants' health conditions and notify them to maintain physical distancing in which they use a light-weight IoT to monitor data then, a fog system to process it and finally an output via a smart phone application [1]. With increase in the use of the IoT, The interest in implementing fog computing as a technology is growing rapidly as shown by the H2020 ICT Work Program for 2016-17. Fog computing is a more suitable and compatible method instead of cloud computing. By using a mobile sensor, that measures and process patients health issues precisely [2]. The main challenge of an IoT-based WARM system, is where the real-time

data acquisition is required for the distributed resources. (LDAP is for the SNs using a mobile DS to increase the WSN coverage geographically and to maintain a long WSN lifetime [3]. For automatic cough rate detection, there is an equipment called Hidden Markov Model (HMM) used. It then attaches with a patient's chest to record by equipped with digital sound recorder and microphone. The evaluation and intensity of this is process precisely give the information of patient if with chronic cough [4]. The identification of a disease is more complex in traditional indicator-based surveillance hence, the event-based surveillance method with computational science is used. It collects information from diverse sources such as news report, social media, inter- based report, etc [5]. Recent discoveries shows that the spread of COVID-19 can be speculated about a inter-personal distance of 2m. The ability of the virus SARS-COV-2 is identified to be an air-bone disease [6]. We face many problems in facing surveillance of a person or a country. A method specifically developed for this kind of activity is called surveillance creep. By using this method, surveillance become a very easy for problems include pandemic, traffic violations, etc [7]. In early stages of April, Google and Apple corporation announced that they were developing contact-tracing applications. User can be able to download it from the online sources. In that, Google API provides a better at privacy areas [8].

METHODOLOGY:

The proposed system is to monitoring the people's health care including temperature rate and Pulse rate by using the MLX90614 temperature sensor and MAX30100 Pulse oximetry sensor respectively. If the sensors results are perfect then people allowed to go inside through Gateway by using Servo motor. Also we can monitor the social distance (2m) between the people by using moving ultrasonic sensor.

BLOCK DIAGRAM:

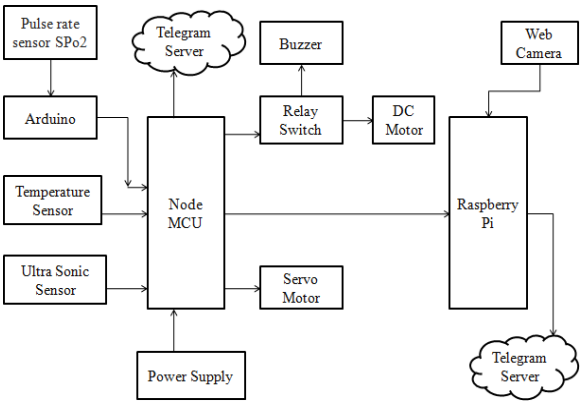

Fig: Block Diagram for surveillance in post-pandemic life and automated health monitoring for COVID-19 by IOT

1. TEMPERATURE SENSOR:

MLX90614 is a Contactless Infrared (IR) Digital Temperature Sensor that can be used to measure the temperature of a particular object ranging from -70° C to 382.2°C. The sensor uses IR rays to measure the temperature of the object without any physical contact and communicates to the microcontroller using the I2C protocol.

MLX90614 Temperature Sensor Specifications

Operating Voltage: 3.6V to 5V (available in 3V and 5V version)

Supply Current: 1.5mA

Object Temperature Range: -70° C to 382.2°C

Ambient Temperature Range: -40° C to 125°C

Accuracy: 0.02°C Field of View: 80°

Distance between object and sensor: 2cm- 5cm (approx.)

The key feature of MLX90614 is that it is a contactless IR temperature sensor with high accuracy. So it can be used in industries to measure the temperature of moving objects like a rotating motor shaft. Due to its high accuracy and precision, it is also used in a wide range of commercial, health care, and household applications like room temperature monitoring, body temperature measurement, etc. MLX90614 sensor can measure the temperature of an object without any physical contact with it. This is made possible with a law called Stefan- Boltzmann Law, which states that all objects and living beings emit IR Energy and the intensity of this emitted IR energy will be directly proportional to the temperature of that object or living being. So the MLX90614 sensor calculates the temperature of an object by measuring the amount of IR energy emitted from it.

2. RASPBERRY Pi:

Raspberry Pi is a credit card-sized computer with an ARM processor that can run Linux. This item is the Raspberry Pi 3 Model B+, which has 1 GB of RAM, dual-band WiFi, Bluetooth 4.2, Bluetooth Low Energy (BLE), an Ethernet port, HDMI output, audio output, RCA composite video output (through the 3.5 mm jack), four USB ports, and 0.1″-spaced pins that provide access to general purpose inputs and outputs (GPIO). The Raspberry Pi requires a microSD card with an operating system on it (not included). The Raspberry Pi is very popular, with lots of example projects and information available online.

3. ULTRASONIC SENSOR:

Ultrasonic sensor is an electronic device that measures the distance of a target object by emitting ultrasonic sound waves, and converts the reflected sound into an electrical signal. Ultrasonic waves travel faster than the speed of audible sound (i.e. the sound that humans can hear). Ultrasonic sensors have two main components: the transmitter (which emits the sound using piezoelectric crystals) and the receiver (which encounters the sound after it has travelled to and from the target).

In order to calculate the distance between the sensor and the object, the sensor measures the time it takes between the emission of the sound by the transmitter to its contact with the receiver. The formula for this calculation is D = ½ T x C (where D is the distance, T is the time, and C is the speed of sound ~ 343 meters/second). For example, if a scientist set up an ultrasonic sensor aimed at a box and it took 0.025 seconds for the sound to bounce back.

Ultrasonic sensors are used primarily as proximity sensors. They can be found in automobile self-parking technology and anti-collision safety systems. Ultrasonic sensors are also used in robotic obstacle detection systems, as well as manufacturing technology. In comparison to infrared (IR) sensors in

proximity sensing applications, ultrasonic sensors are not as susceptible to interference of smoke, gas, and other airborne particles (though the physical components are still affected by variables such as heat).

Ultrasonic sensors are also used as level sensors to detect, monitor, and regulate liquid levels in closed containers (such as vats in chemical factories). Most notably, ultrasonic technology has enabled the medical industry to produce images of internal organs, identify tumors, and ensure the health of babies in the womb.

4. WEB CAMERA:

Webcam is a video camera that feeds or streams an image or video in real time to or through a computer to a computer network, such as the Internet. Webcams are typically small cameras that sit on a desk, attach to a user's monitor, or are built into the hardware. Webcams can be used during a video chat session involving two or more people, with conversations that include live audio and video. For example, Apple's iSight camera, which is built into Apple laptops, iMacs and a number of iPhones, can be used for video chat sessions, using the Messages instant messaging program.

Webcam software enables users to record a video or stream the video on the Internet. As video streaming over the Internet requires much bandwidth, such streams usually use compressed formats. The maximum resolution of a webcam is also lower than most handheld video cameras, as higher resolutions would be reduced during transmission. The lower resolution enables webcams to be relatively inexpensive compared to most video cameras, but the effect is adequate for video chat sessions.

5. PULSE OXIMETRY SENSOR:

All pulse oximeters use red and infrared light to measure SpO2 levels. Nonin PureLight sensor technology uses high- quality LEDs and a calibrated receptor to eliminate interference from secondary frequencies.

Low Perfusion Filter

The removal of noise artifacts is crucial for an oximeter to accurately assess SpO2 in low perfusion. PureSAT signal processing technology uses powerful filtering to remove noise from weak or low perfusion signals, providing reliable and accurate readings.

True Pulse Detection

PureSAT signal processing locates the true pulse in motion and low perfusion. This eliminates false readings due to patient motion, reducing the time required to obtain a reliable measurement.

Smart Averaging

Intelligent, automatic averaging helps users save time in fast-paced care environments. PureSAT technology uses a smart algorithm

that automatically adjusts for three second averaging or faster. Pulse oximetry sensors use red and infrared LEDs to measure deoxygenated and oxygenated hemoglobin. LED contamination can affect the oximeter calibration, resulting in inaccurate SpO2 readings below 80%.

6. SERVOMOTOR:

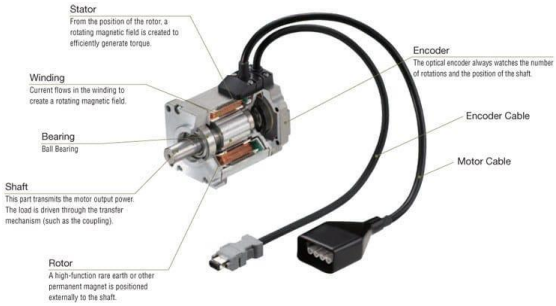

The Servo Motor Consists of stator, winding, bearing, shaft, rotor, encoder, encoder cable, motor cable. The encoder is a sensor for detecting the speed and position of the motor. Light from the light-emitting diode (LED) passes through a position detection pattern on the slit disk and is read by the light-receiving element. Dozens of photo transistors are integrated in the light- receiving element. All of the patterns for absolute position detection depends on the rotation angle of the encoder. The CPU is mounted on the encoder for analysis of the absolute position detection patterns. The current position data is transmitted to the servo driver via serial transmission.

7. ARDUINO NANO:

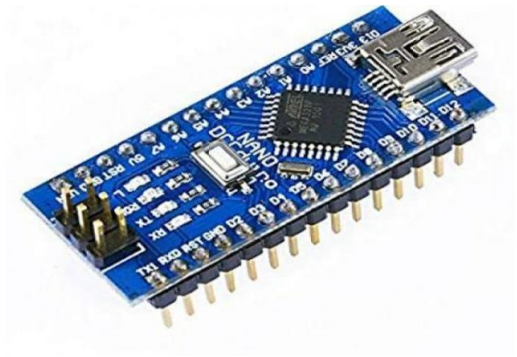

The Arduino Nano is a small, complete, and breadboard-friendly board based on the ATmega328P released in 2008. It offers the same connectivity and specs of the Arduino Uno board in a smaller form factor.

The Arduino Nano is equipped with 30 male I/O headers, in a dip-30 like configuration, which can be programmed using the Arduino Software integrated development environment (IDE), which is common to all Arduino boards and running both online and offline. The board can be powered through a type-b micro-USB cable, or through a 9V battery.

8. BUZZER:

A buzzer or beeper is an audio signalling device, which may be mechanical, electromechanical, or piezoelectric (piezo for short). Typical uses of buzzers and beepers include alarm devices, timers, and confirmation of user input such as a mouse click or keystroke.

This buzzer is ideal when you need to fit a buzzer in a small place. It has its own built- in drive circuit. It offers low current consumption. Used in manufacturing applications such as laptops, alarms, pagers, etc.

9. 5V RELAY:

A relay is an electrically operated switch. It consists of a set of input terminals for a single or multiple control signals, and a set of operating contact terminals. The switch may have any number of contacts in multiple contact forms, such as make contacts, break contacts, or other combinations. Relays are used where it is necessary to control a circuit by an independent low-power signal, or where several circuits must be controlled by one signal. Relays were first used in long- distance telegraph circuits as signal repeaters: they refresh the signal coming in from one circuit by transmitting it on another circuit.

10. POWER SUPPLY:

A power supply is an electrical device that supplies electric power to an electrical load. The primary function of a power supply is to convert electric current from a source to the correct voltage, current, and frequency to power the load. As a result, power supplies are sometimes referred to as electric power converters. Some power supplies are separate standalone pieces of equipment, while others are built into the load appliances that they power. Examples of the latter include power supplies found in desktop computers and consumer electronics devices. Other functions that power supplies may perform include limiting the current drawn by the load to safe levels, shutting off the current in the event of an electrical fault, power conditioning to prevent electronic noise or voltage surges on the input from reaching the load, power-factor correction, and storing energy so it can continue to power the load in the event of a temporary interruption in the source power (uninterruptible power supply).

RESULT:

IoT solutions for Healthcare is our future-ready platform for hospitals and healthcare facilities, designed to deliver improved sustainability, resiliency, hyper-efficiency and people-centricity. We help our customers to insightfully anticipate and manage the everyday matters and extraordinary of healthcare systems. In addition to a specialized platform, libraries and appropriate frameworks should be built so that healthcare software developers and designers can make efficient use of given documents, codes, classes, message templates, and other useful data. Further, a particular class of disease-oriented libraries can be useful.

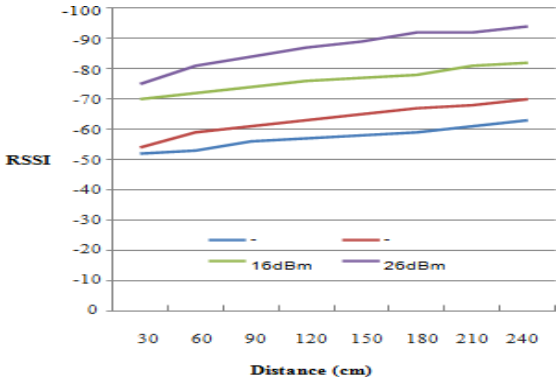

Fig: RSSI of BLE for different distances at different Tx power gain (dBm), keeping two smartphones in a face-to-face position

CONCLUSION:

In this paper, the COVID-SAFE framework can assist in minimizing the corona-virus exposure risk. An IoT framework is presented to monitor participant's health conditions and notify them to maintain physical distancing. The proposed system integrates a wear-able IoT node with a server, by which the IoT sensor node can collect a user's health parameters, such as temperature rate and pulse rate and the camera connected with raspberry pi connects to the network to send the data to the server. The paper proposed a Radio Frequency (RF) distance-monitoring method by using the ultrasonic sensor operates both for indoor and outdoor environments to notify users to maintain the physical distancing. The system can assist participants in monitoring their daily activities and minimize the risk of exposure to the COVID-19. This method provides a summary of recent similar systems available to fight COVID-19 with the help of digital technology. As shown the proposed COVID-SAFE system presents a more complete IoT framework than others and can be used to control the infection after the pandemic.

REFERENCES:

[1] Amira A., Anagnostopoulos D., Baali H., Bensaali F., Dimitrakopoulos G., Djelouat H., Kotronis C., Minou G., and Nikolaidou M., "Managing Criticalities of e-Health IoT systems," 2017 IEEE 17th Int. Conf. on Ubiquitous Wireless Broadband (ICUWB), Salamanca, Spain, 2017, doi:10.1109/ICUWB.2017.8251004.

[2] P.Barbieri, M.Borelli, G. De Gennaro,A. Di Gilio, A. Miani, J. Palmisani, F. Passarini, M. G. Perrone,

[3] P. Piscitelli and L. Setti, "AirbornenTransmission Route of COVID-19: Why 2 Meters/6 Feet of InterPersonal Distance Could Not Be Enough," Int. J. Environ. Res. Public Health, vol. 17, no. 8, pp. 29322937, 2020, doi: 10.3390/ijerph17082932.

[4] Birring, S. S., Fleming, T., Matos, S., Raj, A. A., Evans, D. H., & Pavord, I. D. (2008). The Leicester Cough Monitor: preliminary validation of an automated cough detection system in chronic cough. European Respiratory Journal, 31(5), 1013–1018. doi:10.1183/09031936.00057407.

[5] H. Baek, H. Hwang,E. Jung,S. Kang, and S. Yoo, "Survey on the demand for adoption of Internet of Things (IoT)-based services in hospitals: Investigation of nurses perception in a tertiary university hospital," Appl. Nur. Res., vol. 47, pp. 18–23, 2019, doi: doi.org/10.1016/j.apnr.2019.03.005.

[6] E.Christaki, "New technologies in predicting, preventing and controlling emerging infectious diseases," Virulence, vol. 6, no. 6, pp. 558565, 2015, doi: 10.1080/21505594.2015.1040975.

[7] R.A. Calvo, S. Deterding, and R. M. Ryan, "Health surveillance during covid- 19 pandemic," Bmj, vol. 369, 2020, doi: 10.1136/bmj.m1373.

[8] X. Chen,Y. Fan,Y. Yin, and Y. Zeng, "The internet of things in healthcare: An overview," J. Ind. Inf. Integr., vol. 1, pp. 3-13, 2016, doi: 10.1016/j.jii2016.03.004.

[9] S. Chang, W.Chang,R. Chiang,and S. Wu, "A Context-Aware, In-teractive M-Health System for Diabetics," IT Prof., vol. 18, no. 3, pp. 14–22, 2016, doi: 10.1109/MITP.2016.48.

[10] T. Sharon, "Blind-sided by privacy? digital contact tracing, the apple/google api and big tech's newfound role as global health policy makers," Ethics Inf. Technol., 2020, doi: 10.1007/s10676-020-09547x.

[11] George, A., Dhanasekaran, H., Chittiappa, J. P., Challagundla, L. A., Nikkam, S. S., & Abuzaghleh, O. (2018). Internet of Things in health care using fog computing. 2018 IEEE Long Island Systems, Applications and Technology Conference (LISAT). doi:10.1109/lisat.2018.837801 2.

[12] B. M. Eskofier, H. Gassner, J. Klucken, C. F. Pasluosta,and J. Winkler, "An emerging era in the management of Parkinson's disease: Wearable technologies and the Internet of Things," IEEE J. Biomed. Health Inform., vol. 19, no. 6, pp. 1873–1881, 2015, doi: 10.1109/JBHI.2015.2461555.

[13] N. Laplante, and P. A. Laplante, "The Internet of Things in Healthcare: Potential Applications and Challenges," IT Prof., vol. 18, no. 3, pp. 24, 2016, doi: 10.1109/MITP.2016.42.

[14] R. Litoriya, and P. Pandey , "Elderly Care through Unusual Behavior Detection: A Disaster Management Approach using IoT and Intelligence," IBM. J. Res. Dev., vol. 64, no. 1/2, pp. 15:1-15:11, 2019, doi: 10.1147/JRD.2019.2947018.

[15] Rahman, G. M. E., & Wahid, K. A. (2020). LDAP: Lightweight Dynamic Auto-Reconfigurable Protocol in an IoT- Enabled WSN for Wide-Area Remote Monitoring. Remote Sensing, 12(19), 3131. doi:10.3390/rs12193131.

[16] Vedaei, S. S., Fotovvat, A., Mohebbian, M. R., Rahman, G. M. E., Wahid, K. A., Babyn, P., Sami, R. (2020). COVID-SAFE: An IoT-based System for Automated Health Monitoring and Surveillance in Post- Pandemic Life. IEEE Access, 1– 1. doi:10.1109/access.2020.3030194.

Towards Secured Certificate Validation System Using Mobile Block Chain and Sha-512 Hash Generation for Duplicate Prevention

[1]M.Abitha, [2]P.Goperundevi, [3]M.Ishwarya

[1,2,3] BE Computer Science and Engineering, MRK Institute of Technology, Kattumannarkoil, Tamilnadu

Abstract - In the digital world, each and every thing are digitized in which the certificate of SSLC, HSC and academic certificate are digitized in the educational institution and provided to the students.The increase in security breaches compromise user's privacy of academic digital certificate.The institution and organization find it very difficult to validate and verify the digital certificates By using blockchain technology we can provide a more secure and efficient digital certificate validation

INTRODUCTION

THE Internet of Things (IoT) connects a large scale of heterogeneous devices for information exchanging and economic benefits, in which Mobile Edge Computing (MEC) is a promising solution that allows mobile devices to run demanding applications by providing computing resources.However, building trust between multiple parties in MEC is a challenge because these parties often have conflicting interests[1], [2]. To address this problem, blockchain which is a tamper Shaoyong Guo, Yao Dai, Xuesong Qiu and Feng Qi are with State Key

Laboratory of Networking and Switching Technology, Beijing University of Posts and Telecommunications, 100876 China. (E-mail: syguo@bupt.edu.cn;

daiyao@bupt.edu.cn; xsqiu@bupt.edu.cn; qifeng@bupt.edu.cn). Feng Qi is

also with Cyberspace Security Research Center, Peng Cheng Laboratory,Shenzhen, China. (Corresponding Author: Xuesong Qiu) Song Guo is with the Department of Computing and Research Institute for Sustainable Urban Development, Hong Kong Polytechnic University, Hong Kong. (Email: song.guo@polyu.edu.hk)

This work was supported by National Key R&D Program of China (2019YFB2102302), the National Natural Science Foundation of China (61702048), Ubiquitous Energy Internet of Things based on Industrial Internet

 proof transaction database shared by all nodes participating in a network based on a consensus protocol is introduced [3].Features like security, transparency and decentralization allow it to be a distributed peer-to-peer network where non-trusting members can interact with each other in a verifiable manner without a trusted intermediary [4], [5]. To ensure data security in mobile commerce between mobile devices, blockchain has been integrated as an efficient security solution into establishing trust between mobile devices in a decentralized network[6].

RELATED WORK

Recently, several blockchain mining mechanisms have been proposed. S. Kim et al. [16] presented a blockchain mining game model based on multi-leader multi-follower Stackelberg game. In the model, users are grouped into multiple distributed mining pools to gather resources while Stackelberg game is used to solve collaboration and competition issues in each mining pool and between multiple pools. L. Luu et al. [20] introduced a distributed computational power splitting game(CPS game) model to realize profit maximization. M. Salimitari et al. [21] presented a prospect theoretic approach for profit maximization in bitcoin pool mining. Since it is a big challenge for a new miner to decide which pool to join to get the most profits, they used prospect theory to calculate the miner's expected utility deriving from each pool. These studies have integrated blockchain into various areas of the IoT effectively. However, in mobile edge networks, the widespread application of blockchain is challenging due to limited computing and storage resources of mobile devices. To support the application of blockchain in mobile networks, we propose to offload blockchain mining tasks to the edge network.These recent researches have achieved excellent results and introduced innovations well worth adopting. On the basis of existing resource allocation optimization strategies, we take both the mining benefits of CMN and edge cloud as the optimization goal, to adapt to our scenario. Besides, different from these existing researches on mining strategies in edge network, we support mining offloading not only to edge clouds, but also to neighbour devices to take advantage of idle device resources within the CMN and reduce communication delays.

SYSTEM MODEL

We consider a scenario with an ECO and several CMNs M = {1, . . . , M} in a mobile blockchain. CMN i is consisted of multiple mobile devices Ni = {1, . . . , Ni} which are arranged according to the time of joining CMN, and the available resources of mobile devices in it are set to Ci = {c1, . . . , cNi }. Note that the collection is dynamic, Ni will change when a device joins or exits the CMN. As mentioned before, there are both mining-devices and sharing-devices in the CMN. We use Mi = {1, . . . , Mi} to describe mining-devices in CMN i. Mining-devices can apply for resources from ECO through the edge broker or from sharing-devices within the CMN to offload their mining tasks. In order to reduce transmission costs, the mining task is preferentially offloaded to sharing-devices within the CMN through an auction mechanism which will be detailed in section 3.2.

Considering different CMNs, let R = {r1, . . . , rM} denote the expected average resources for mining of different CMNs. Only if resources in a CMN can't reach the expected value, the edge broker in it requests resources for mining-devices from ECO. Therefore, a CMN's resource demand from ECO is the expected mining resources minus the resources it owns, defined as yi = max(MiriiPj∈Nicj , 0). Obviously, there is a limit that ri ∈ [ri, r], ∀i ∈ M, where ri is the average resources of mobile devices in CMN i and r is the maximum resources can be provided by ECO.In this subsection, a double auction model is adopted for mining offloading within the CMN, and mining offloading to ECO is modeled as a Stackelberg game.

1) Mining offloading within CMN: Considering the competition among mining-devices, we adopt a double auction [36], [37] method for resource sharing between mobile devices in CMN.

OFFLOADING WITHIN CMN BASED ON DOUBLE AUCTION

In this section, on the basis of the double auction model presented in section 3.2.1, we calculate the BNE to acquire the optimal auction strategy in CMN. In a round of mining, mobile devices first carry out the auction process to offload mining tasks to neighbour devices.

After that, the remaining mining tasks will be offloaded to the edge cloud. Since the network is dynamic, we consider to balance the algorithm overhead and wait time of newly joining devices and set the process to non-preemptive. When the number of newly joining devices for mining in the CMN reaches Nf , these newly added devices execute the proposed algorithm and perform a new round of mining.

SIMULATION RESULTS AND EVALUATIONS

Experimentally, the proposed system is implemented by using Hyperledger Fabric to write smart contracts on the blockchain. The Fabric network is divided into four organizations, and each organization enables sixteen peers to simulate a CMN. Each peer is installed on a x64 virtual machine with 32 vCPUs. In order to ensure the accuracy of the experimental results without being affected by device random exit or entry, we initiate 10 fabric networks and average the experimental results. In the experiment, we first create 500 blocks based on the loadtest library of Node.js and use the peers to implement the mining process. Then we study the resource allocation and profits of ECO and CMN as the primary performance metrics for the proposed mechanism. Profits of ECO and miners are compared with the pricing-based edge computing resource management method (PECRM) in [28]. PECRM is a pricing-based method for edge resources which only considers offloading to edge cloud. Simulation results verify the superiority of the proposed mechanism. Further, we study the impact of various configurable parameters such as delay effect, transaction number, reward rate, etc. on the performance of CMN and ECO to give some suggestions on their mining strategies. The related parameters in the simulation are listed in Table II, which are derived from simulation on the fabric. They are applied in simulation examples unless otherwise stated.

CONCLUSION

Aiming at applying blockchain in IoT mobile devices, this paper proposes that the free resource displayed on non-miningdevices and edge cloud can be selected to construct collaborative mining network (CMN) to execute mining tasks for mobile blockchain. In the CMN, mobile users decide whether to offload mining tasks to sharing-devices in the CMN or edge cloud. Further, offloading within the CMN is managed by a double auction mechanism, in which the BNE is calculated to figure out the optimal auction price. Then, we model the interactions between ECO and CMNs as a Stackelberg game and analyze the NE of the game to obtain the optimal price and resource allocation method. In the simulation, we study the impact of various configurable parameters on the performance of CMNs and ECO. Moreover, the performance of our mechanism is compared with the PECRM method, simulation results show that under our proposed mechanism, CMNs obtain 6.86% more profits on average.

REFERENCES:

[1] W. Chen, Z. Zhang, Z. Hong, C. Chen, J. Wu, S. Maharjan, Z. Zheng, and Y. Zhang, “Cooperative and distributed computation offloading forblockchain-empowered industrial internet of things,” IEEE Internet of Things

Journal, vol. 6, no. 5, pp. 8433–8446, Oct 2019.

[2] X. Qiu, L. Liu, W. Chen, Z. Hong, and Z. Zheng, "Online deep reinforcement learning for computation offloading in blockchain-empowered mobile edge computing," IEEE Transactions on Vehicular Technology, vol. 68, no. 8, pp. 8050–8062, Aug 2019.

[3] J. Huang, L. Kong, G. Chen, M. Wu, X. Liu, and P. Zeng, "Towards secure industrial iot: Blockchain system with credit-based consensus mechanism," IEEE Transactions on Industrial Informatics, vol. 15, no. 6, pp. 3680–3689, June 2019.

[4] O. Novo, "Blockchain meets iot: An architecture for scalable access management in iot," IEEE Internet of Things Journal, vol. 5, no. 2, pp. 1184–1195, April 2018.

[5] P. K. Sharma, S. Singh, Y. Jeong, and J. H. Park, "Distblocknet: A distributed blockchains-based secure sdn architecture for iot networks," IEEE Communications Magazine, vol. 55, no. 9, pp. 78–85, Sept 2017.

[6] K. Suankaewmanee, D. T. Hoang, D. Niyato, S. Sawadsitang, P. Wang, and Z. Han, "Performance analysis and application of mobile blockchain," in 2018 International Conference on Computing, Networking and Communications (ICNC), March 2018, pp. 642–646.

[7] N. Zhao, H. Wu, and Y. Chen, "Coalition game-based computation resource allocation for wireless blockchain networks," IEEE Internet of Things Journal, vol. 6, no. 5, pp. 8507–8518, Oct 2019.

[8] H. Cho, "Asic-resistance of multi-hash proof-of-work mechanisms for blockchain consensus protocols," IEEE Access, vol. 6, pp. 66 210–66 222, 2018.

[9] T. G. Rodrigues, K. Suto, H. Nishiyama, N. Kato, and K. Temma, "Cloudlets activation scheme for scalable mobile edge computing with transmission power control and virtual machine migration," IEEE Transactions on Computers, vol. 67, no. 9, pp. 1287–1300, Sep. 2018.

[10] Y. Chen, B. Ai, Y. Niu, R. He, Z. Zhong, and Z. Han, "Resource allocation for device-to-device communications in multi-cell multiband heterogeneous cellular networks," IEEE Transactions on Vehicular Technology, vol. 68, no. 5, pp. 4760–4773, May 2019.

Waste Heat Recovery Plant for Heaters in Home and Boilers Using Thermoelectric Generators

[1]Chandru P, [2]Eshvanthine R S, [3]Harishwar R, [4]Krishna Chandar K, [5]Dr.M. Ramasamy

[1,2,3,4] K.S.R. College of Engineering, Tamilnadu, India
[5]Associate Professor, K.S.R. College of Engineering, Tamilnadu, India

Abstract - Power generation based on renewable energy sources has experienced an important growth due to the challenge of global warming and climatic conditions. This paper proposes the power generation based on Thermo Electric Modules. Peltier module is a device which converts heat energy into electrical energy. Peltier module is a device that uses the principle of thermoelectric effect and converts temperature differences in to an electric voltage and vice versa. The conversion technology is based on the See beck effect and high thermal concentration using optical concentrators. Pettier module produces no air pollution or hazardous waste, free of moving parts, which reduces the maintenance cost of the proposed system. Peltier module is made up of semiconductor materials such as Bismuth Telluride. The temperature on the panel can be controlled by using Fresnel lens and it is connected to charge controller. The generated voltage is increased with increase in temperature. The panel is connected to the battery through the charge controller. The experimental set up has been implemented. The output voltage obtained from the panel is of 2.18 volts. The voltage is increased up to 12 volts using boost converter. The obtained DC voltage of 12 volts is charged using battery and it can be used for charging of rechargeable household appliances and electronic gadgets.

INTRODUCTION

Thermoelectric technology started its history in the 17th century and has been developing over the years. Later on, many discussions were carried out with many disadvantages of the Thermo Electric Generation (TEG) technology. Even though many disadvantages are found, the power generation based on the TEG technology has been used in several areas. In renewable energy technology, power generation based on the photovoltaic cell has been used predominantly. Photovoltaic panels are based on Solar cells, while Solar-Thermal electric panels are based on Peltier cells. The Peltier - panel is used to convert the solar-thermal energy in to an electrical energy. This energy conversion is based on the See beck effect. Nowadays, the renewable energy sources are dominating, since it does not produce pollution and hazards to the environment. The sunlight is converted into an electrical energy through photovoltaic cell and solar thermal. Photovoltaic cells are built up flat panels. In this paper Peltier panel is used to generate electrical energy based on the Seebeck effect. Solar energy is freely available throughout the year with no pollution. The electrical power is generated according to the thermo electric module. The proposed system consists of Peltier module, heat sink, boost converter and battery. Peltier module converts heat energy into electrical energy. It converts the temperature difference into an electrical voltage and vice versa based on the thermoelectric effect principle. The temperature difference is calculated from the hot side and cold side of the module. During power generation, the thermoelectric module is to be cooled. Instead of cooling the panel, the heat energy as thermal waste is utilized for the energy conversion. Thermoelectric converter is connected at the backside of the solar panel. This forms the hybrid module. This grren energy technology is widely used in

industry, since the industry produces more heat energy during the process. Bansal and Martin [1] explained on Thrombelastogarphy (TEG) in practical by considering the clinical use in trauma resuscitation. The performance characteristics are investigated and compared with three domestic refrigerators, namely vapour - compression, thermoelectric and the absorption refrigerators based on the real experimental data. Jeffrey Snyder.G et al [2] proposed that the intensive reduced efficiency and compatibility factor are derived for the thermoelectric power generation. The overall efficiency is derivable from a thermodynamic state function of two variables, the relative current density and temperature. Najath Akram and Nisabha Jayasunder [3] stated that the thermoelectric effects are the physical principle which is used to directly convert heat energy into electricity or vice versa based on charge carrier and phonon transport phenomena in a solid. Priti G. Bhadake and Chetan B. Patond [4] explained about to design and analyze the heating and cooling system which utilizes non-conventional energy source (Renewable energy sources) with the help of Thermo-Electric module that works on the principle of the Peltier effect.

EXISTING SYSTEM

As the dawn breaks, every day we come across some new technology or development in the field of science. The scope of this wide spectrum in which humans are encouraged to find a better substitute for the older technologies has made so many advancements to make day-today life easy. One such major point of focus today is to replace the electricity with the non conventional energy resourceharvesting methods. In the same way, heat can be a good source to produce power from it. The principle of Seebeck effect can be used for such applications. It was first described as long ago in 1820 by a German physicist - Thomas Seebeck. Two metals with a common contact point, where the potential is developed due to the temperature difference in the other two ends of metals, is all about Seebeck effect. Peltier module also follows the same principle. We have used TEC-12706 in our experimentations to know ways to optimise the use of a Peltier module. This review paper shows that heat harvested from different heat sources generate different amount of voltages and overall power. Experimentations also showed that using different ways to extract heat from the other side of the module made output voltage to vary accordingly.

EXISTING BLOCK DIAGRAM

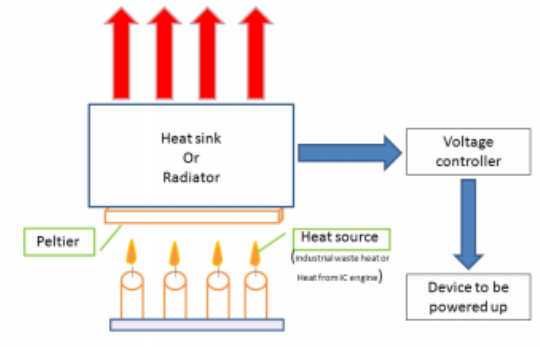

PROPOSED SYSTEM

The project hinge on charging the battery using thermal energy. By reason of increased population, rural development, and insufficient resource occurrence, there is a momentous power demand. For the sake of this demand a proper solution should be taken. To rectify this problem, many ways has been suggested. The existing solutions are, providing inverter battery which gets charged using the main power supply. Rarely some uses the solar panel for the same purpose. To this,a solution have been given to get rid of this by using thermoelectric device which works on the Seebeck effect. By the principle of Seebeck effect, Peltier sensor converts thermal energy

into electrical energy. This energy can be used for charging the battery without the main supply.

BLOCK DIAGRAM

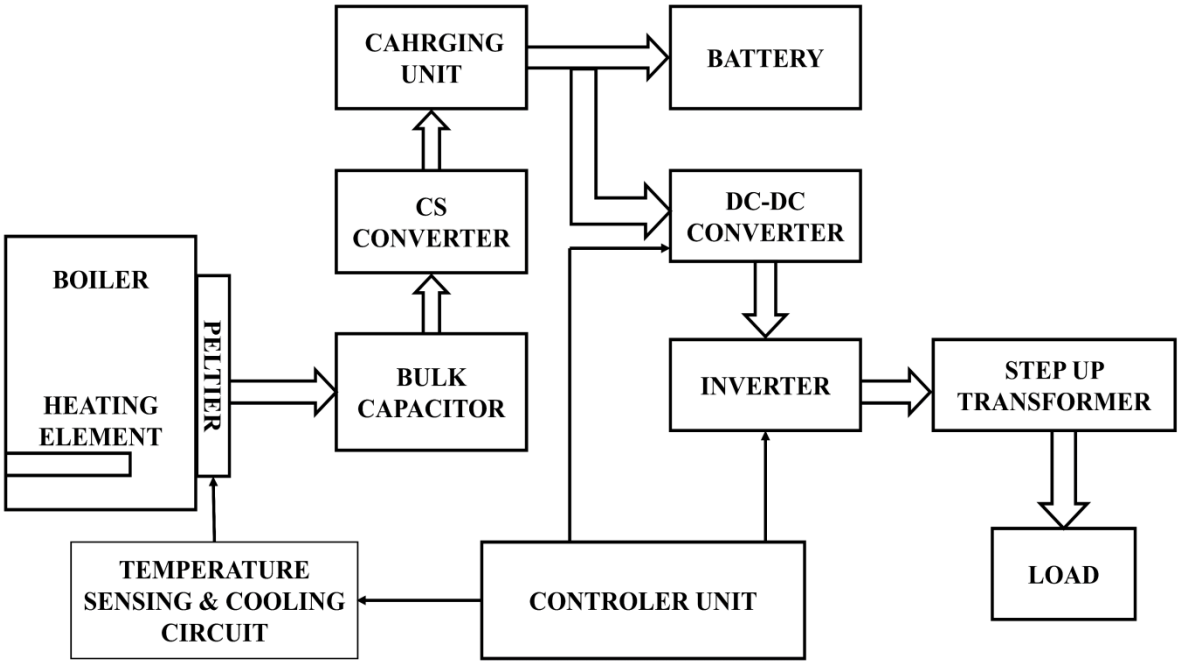

PROCEDUCER

1. Each peltier have generate a small amount of voltage like 1.5v – 2.5v . so we arrange a series of 5-6 peltier for reach the minimum 8voltage of output
2. 8 voltage of output is temporary storage in the bulk capacitor and improve the current rating through the CS converter
3. The CS converter act as a fast charging mode to the main battery for a charging purpose
4. 7805 is a 5v voltage regulator for constant voltage to the microcontroller
5. 7812 is a 12v voltage regulator for inverter and optocoupler
6. Battery of 12 voltage is boosted by 230v using inverter and converter the DC to AC form
7. The enough voltage of load is obtain and the output value is 230v / above 85 watts in a AC form.

CONCLUSION

Thermoelectric devices are an advantage over the conventional resources despite of their low efficiency. Moreover, their versatility in application of cooling and power generation also makes them considerable over electrically powered devices. Since the voltage obtained from a thermoelectric generator is tiny, certain combinations of modules in series and parallel make the power generation comparatively efficient. Coming to the cost considerations, the thermoelectrics are costlier than the other power generating techniques, but one can always trade off between the cost and the conventional energy resources. Our prototype generates 8 volts and 10.5 volts from industrial waste heat respectively

REFERENCES:

[1] Suresh S.Balpande, Rajesh S.Pande, Rajendra M.Patrikar, Design and Low Cost Fabrication of Green Vibration

Energy Harvestor, Elsevier, Sensors and Actuators, A: Physical, Volume 251, 1 November 2016, Pages 134-141, ISSN 0924-4247 , http://dx.doi.org/10.1016/j.sna.2016.10.012

[2] Surash Balpande, Manish Bhaiyya, Dr, Rajesh S. Pande, Low Cost Fabrication of Polymer Substrate Based Piezoelectric MicroGenerator With PPE,IDE and ME, Accepted Manuscript, IET Electronics Letter, ISSN 1350-911XPrint ISSN 0013-5194 DOI: 10.1049/el.2016.4099

[3] Sarinee Ouitrakul, Preliminary Experiment for Electricity Generation using Peltier Modules, 78-1-4799-2993-1/14/$31.00 ©2014 IEEE

[4] Web Source: www.reuk.co.uk/wordpress/thermoelectric/what-isa-peltier-cooler/

[5] P.M.Solanki, Dr. D.S. Deshmukh, Dr. V. R. Diware, A Review on factors to be considered for a thermoelectric power Generation System Design, International Conference on Global Trends in Engineering, Technology and Management (ICGTETM-2016), ISSN: 2231-5381

[6] Allwin Jose, Alan D'souza, Sarvesh Dandekar, Jitesh Karamchandani, Pavan Kulkarni, Air Conditioner using Peltier Module, 2015 International Conference on Technologies for Sustainable Development (ICTSD-2015), 978-1-4799-8187- 8/15/$31.00 ©2015 IEEE

[7] Takafumi Hatano, Mingcong Deng, and Shin Wakitani, A Cooling and Heat-retention System Actuated by Peltier Device Considering Fan-motor Control, 2014 IEEE International Conference on Automation Science and Engineering (CASE) Taipei, Taiwan, August 18-22, 2014, 978-1-4799-5283- 0/14/$31.00 ©2014 IEEE

[8] Dr. Steven O'Halloran, Mr. Matthew Rodrigues, Power and Efficiency Measurement in a Thermoelectric Generator, AC 2012-3976

[9] Shigenao Maruyama, Atsuki Komiya, Hiroki Takeda and Setsuya Aiba, Development of Precise-temperature-controlled Cooling Apparatus for Medical Application by Using Peltier Effect-2008 International Conference on Bio-Medical Engineering and Informatics- Institute of Fluid Science, Tohoku University-2008 International Conference on Bio-Medical Engineering and Informatics, 978-0-7695-3118-2/08 $25.00 © 2008 IEEE/DOI 10.1109/BMEI.2008.239

[10] Mohak Gupta, Review on Heat Recovery Unit with Thermoelectric Generators, International Journal of Engineering and Innovative Technology (IJEIT) Volume 4, Issue 4, October 2014, ISSN: 2277-3754.

Design and Development of Wearable Patch Antenna for GPS Applications

[1] C.Daffniya Selvamary, [2]Mr. S. Karthick

[1] Master of Engineering in communication system, A.R.J College of Engineering and Technology,Mannargudi (ANNAUNIVERSITY)

[2] Assistant Professor, Dept of ECE, A.R.J College of Engineering and Technology,Mannargudi

Abstract— The GPS (Global Positioning System) has revolutionized modern day navigation and position location. It is now the means of tracking and location mapping in most of the aircraft carriers, ships and even in automobiles. With advancement in technology and science, GPS applications are even used by common public for the want of updating location, tracking purposes and even travelling from one place to another . Most of the GPS Antennas require circular polarization and this is achieved by microstrip antennas which satisfy criteria like low cost (economically feasible), ease of fabrication, miniaturization along with high precision and reliability. Design of a patch antenna on a high dielectric constant substrate results in a highly inefficient radiator due to surface wave losses and has a very narrow bandwidth and even less gain . All these effects can be eventually minimized by printing EBG structures on high dielectric substrates.

With the growing technology wearable devices have become very popular now-a-days. The wearable device is equipped with antenna is capable to transmit the entire sensor's data to the system for monitoring such as tracking, navigation, mobile computing ,medical science and public safety. As a wearable antenna can be a part of the clothing, the design of antenna is very important to ensure comfort to the wearer without affecting the antenna performance. This paper intend to focus on the specification of the truncated square micro strip rectangular patch antenna by using jute as the substrate for the antenna and analysis that to design proper wearable antennas for Global positioning systems (GPS) applicationsat1.575GHz

Keywords— Global positioning systems (GPS) microstrip antennas.

I. Introduction

Antenna is a transducer designed to transmit or receive electromagnetic waves. There are many types of antennas such as: linear wire antenna, aperture antenna, horn antenna and microwave antenna. Among all these antennas, micro strip antennas are more popular now a days over conventional other antenna due to their advantages like small size, lightweight ,low cost and easy to fabricate with planar structures. As a result huge research is going on design of micro strip antenna has made significant progress during the recent years. These micro strip patch antenna scan provide dual and circular polarizations and is very well suited for applications such as wireless communications system, GPS, cellular phones ,pagers, radar systems, and satellite communications systems[1]. Researchers present various designs to improve different antenna parameters at different resonate frequencies. Design of Micro strip Patch Antenna for GPS Applications using EBG Structures: This paper proposes a circularly polarized micro strip patch antenna for Global Positioning System GPS) and has studied the performance of square shaped micro strip patch antenna in L1 andL2 bands. Operating range of GPS is 1.227GHz (L2Band) to 1.575GHz (L1Band) .Improvement is significant in terms of gain and axial ratio bandwidth when compared to antenna designs without EBG .Design of Rectangular Micro strip Patch Antenna: This article proposes a rectangular micro strip patch antenna in Advanced Design System Momentum (ADS) with resonant requency4.1GHz. This antenna operates at UWB frequencies .Now a days Global positioning systems[2] are widely in use today for many scientific applications. GPS is increasingly being used as a standard hardware clock reference GPS is an US military system consisting of an array of 24 satellites equipped with high precision atomic clock arranged such that covers the entire globe and is capable to provide accurate time and positioning information to Earth based systems .The fundamental component of the GPS system is to provide accurate time. More over, GPS is a global system, it can be utilized any where in the world. Radio timing systems have different frequencies and are localized by national boundaries with the signals varying

from location to location. On the other hand GPS signals are the same across the globe. Due to these advantages GPS system is used in antenna now a days. A single GPS antenna can be shared between multiple GPS servers by using a GPS splitter. Applied successfully in various part of life such as health monitoring, physical training, navigation, RFID, medicine, military etc. Considering the easily available flexible textile as a dielectric material, the cost of the antennas becomes very low. The integration of wireless electronic with textile technology resulting in smart garment in global Positioning System (GPS) application is a solution for several applications, especially for tracking and rescue [3] issues. Hence in this paper the antenna performance is studied towards achieved circular polarization (CP) by truncating two opposite edged of the square patch by using jute as the substrate1.575GHz.

Design of Micro strip Patch Antenna for GPS Applications using EBG Structures:

This paper proposes a circularly polarized micro strip patch antenna for Global Positioning System (GPS) and has studied the performance of square shaped micro strip patch antenna in L1 and L2 bands. Operating range of GPS is 1.227GHz (L2Band) to 1.575GHz (L1Band). Improvement is significant in terms of gain and axial ratio bandwidth when compared to antenna designs without EBG.

Design of Rectangular Microstrip Patch Antenna:

This article proposes a rectangular microstrip patch antenna in Advanced Design System Momentum (ADS) [4]with resonant frequency 4.1GHz. This antenna operates at UWB frequencies. Now Global positioning systems. Fig. Rectangular patch antenna

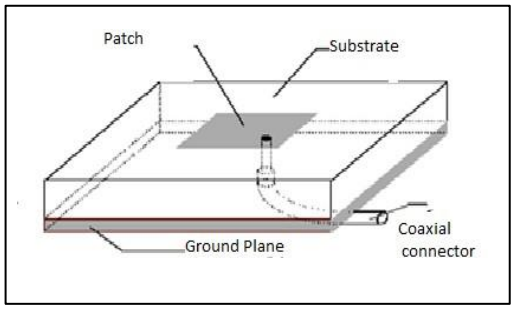

are widely in used for many scientific applications. GPS is increasingly being used as a standard hardware clock reference GPS is an US military system consisting of an array of 24 satellites equipped with high precision atomic clock arranged such that covers the entire globe and is capable to provide accurate time and positioning information to Earth based systems. The fundamental component of the GPS system is to provide accurate time. More over, GPS is a global system, it can be utilized anywhere in the world. Radio timing systems have different frequencies and are localized by national boundaries with the signals varying from location to location. On the other hand GPS signals are the same across the globe. Due to these advantages GPS system is used in antenna now a days. A single GPS antenna can be shared between multiple GPS servers by using a GPS splitter. Applied successfully in various part of life such as health monitoring, physical training, navigation, RFID, medicine, military etc. Considering the easily available flexible textile as a dielectric material, the cost of the antennas becomes very low.

The integration of wireless electronic with textile technology resulting in smart garment in global Positioning System(GPS) application is a solution for several applications, especially for tracking and rescue [3]issues. Hence in this paper the antenna performance is studied towards achieved circular polarization (CP) by truncating two opposite edged of the square patch by using jute as the substrate at 1.575GHz.

A wearable patch antenna developed for different types of GPS application has been presented. This research paper gives emphasis on particular wearable patch antenna for GPS application at 1.575GHz using Jute as the substrate for the antenna. The designed micro strip patch antenna can be used for GPS applications under the frequency band of 1.227-1.575GHz. VSWR calculated is observed to be 1.04 at resonant frequency of 1.476GHz which clearly shows it as an efficient radiator and maximum power is coupled between the transmission line and the antenna. From the results it is clear that the measured axial ratio is less than 3db for the proposed antenna. Different parameters of Antenna are analyzed clearly with and without EBG

clearly depicting the advantage of using EBG structures to suppress surface waves and for improving antenna parameters. When 0th iteration was used the return loss was found to be -27.96dB When 1st iteration was used the return loss was found to be -28.07 dB. When 2nd iteration was used the return loss was found to be -32.86 dB.

REFERENCES

[1] Yong- Xin Guo; Kah- Wee Khoo; Ling Chuen Ong "Wide band Circularly Polarized Patch Antenna Using Broadband Baluns" Antennas and Propagation, IEEE Transactions on Volume 56, Issue 2, Feb. 2008.

[2] A.H.M. Zahirul Alam, Md. Rafiqul Islam and Sheroz Khan " Design and Analysis of UWB Rectangular Patch Antenna ", Pacific conference on applied electro magnetics proceedings, December 4- 6 , 2007, Malaysia.

[3] Werfelli Houda, Mondher Chaoui, Hamadi Ghariani, and Mongi Lahiani. "Design of a pulse generator for UWB communications", 10th International Multi-Conferences on Systems Signals & Devices 2013 (SSD13), 2013.

[4] Mahdi Ali, Abdennacer Kachouri and Mounir Samet "Novel method for planar microstrip antenna matching impedance", Journal Of Telecommunications, May 2010.

[5] S. Siva sundara pandian, Dr. C.D. Suriyakala" Novel Octagonal UWB Antenna for Cognitive Radio" IOSR Journal of Electronics and Communication Engineering (IOSR-JECE), Sep-Oct. 2012.

[6] Mustafa K. Taher Al-Nuaimi and William G. Whittow " On The Miniaturization of Microstrip Line-Fed Slot Antenna Using Various Slots" Final author version. IEEE Loughborough Antennas and Propagation Conference (LAPC), Loughborough, UK, 2011.

[7] Aruna Rani, R.K. Dawre "Design and Analysis of Rectangular and U Slotted Patch for Satellite Communication" International Journal of Computer Applications , December 2010.

[8] Dhivya N, Pooja Jayakumar, Prashanth Mohan, Rekha Zacharia, Vishnupriya Vasudevan, G. Prabha" Comparative Study Of Slotted Microstrip Antenna Fed Via A Microstrip Feed Line" Proceedings of 1st IRF InternationalConference, Coimbatore, 9th March-2014

Ergonomics Problems and Risk Assessment in process Industry

K. Kajesh[1*]
[1]Department of Industrial Safety Engineering, NSN College of Engineering and Technology, Karur, India
***Author for correspondence** E-mail: kajeshkantha@gmail.com

Abstract
Ergonomics is one of the most important elements which influence both productivity and the quality of worker's output. Avoidance the ergonomic consideration while designing the work and work process increasing the risk among workers which may cause temporary (or) chronic Musculoskeletal disorder (MSD). The main purpose of this paper is to identify the relationship ergonomic problem and risk assessment in manufacturing and process industry workers. This research consists of quantitative research conducted in Saint-Gobain, Perundurai. The company workers were analyzed in the data analysis process. Findings have shown that work design, work process design, workload, noise level and ergonomic issues have a significant and positive relationship on risk assessment among respondent. The risk and ergonomic issues were detailly analyzed by using Sound Level Meter (SLM), Dose batch and RULA & REBA based assessment tool. However, change in engineering design and operation of machines, minimizes the ergonomic issue and risks, gave a better result.

Keywords: *ergonomic factors; manufacturing sector; work process design; SLM; noise level; RULA & REBA tool.*

INTRODUCTION

Working life is full of hassles, deadlines, demands and frustrations. For many workers, poor ergonomics has become an ever-present factor in their industry. Ergonomics is an interaction between an individual and the working environment. But when one is constantly running in poor ergonomic mode, the mind and body pay the price. Ergonomics considers both physical and psychological human aspects. It may cause repetitive strain injuries and mental strains. Poor ergonomic may lead to serious mental and physical health problems like temporary and chronic Musculoskeletal Disorder (MSD). It could also affect relationships at home and work. The value of ergonomics extends beyond health and safety. Good ergonomics gives a solution in both technical and organizational domains. It reduces the overall cost and helps to increase the production.

LITERATURE REVIEW

Ergonomics has been defined as a multidisciplinary science that seeks to comfort the workplace and all of its physiological aspects to the worker (Goetsch, 2005). Ergonomics used design and evaluation techniques to make tasks, objects, and environments more compatible with human abilities and their limitations. Ergonomics also seeks to improve productivity and quality by reducing workplace stressors, reducing the risk of injuries and illnesses, and increasing efficiency (Carayon, 2011).

In modern times ergonomics have become a major source of stress for employees in an organization. In ergonomics, there are stressors that have a negative impact on the performance of employees. Poor design of work, including work process, workstation design, shift work, humidity, and long working hours could increase the stress level among the workers caused by the ergonomic factors (Zafir, 2012). This could increase the

likelihood of ergonomic illness such as cumulative trauma disorders (CTD), repetitive strain injuries (RSI), back pain, shoulder pain, fatigue, and others illness (Karwowski, 2001).

A better physical environment at the workplace can boosts the employees and ultimately improve their productivity. Experience has conclusively demonstrated that organizations with good working conditions out produce those with poor conditions. The economic return from investment in an improved working environment is usually significant. In addition to increasing production, ideal working conditions improve the safety record, reduce absenteeism, tardiness, and labor turnover, raise employee morale, and improve public relation (Freivalds & Niebel, 2009).

Results from studies concerning the factors contributing to stress have been mixed (Sauter, Murphy, & Hurrell, 1990; National Institute of Occupational Safety and Health (NIOSH), 2014), but it is clear that ergonomic factors have a significant relation and influence on stress (Karwowski, 2001; Zafir & Durrishah, 2009; Loo & Richardson, 2012). Although ergonomic consideration have been routinely practiced in designing the work and work station the high-income countries for a long time, but in Malaysia it has been difficult to implement it in most companies due to lack of management commitment and budget (Loo & Richardson, 2012). The aim of this study is to identify the relationship between ergonomic factors and stress among workers.

A cost-benefit analysis method for calculating the cost of employment is described. The purpose of the analysis is to portray, in financial terms, the benefits to health, productivity, and quality brought about by improved working conditions.The analysis can be used to measure the financial benefits after the completion of changes to working conditions, or it can be used to show the potential value of proposed expenditure (improvements to working conditions) and thus compete for resources on an equal footing with other enterprise proposals. The cost-benefit analysis may also be used as a sensitivity analysis to detect areas of high labor cost (e.g., high injury absences) and/or productivity losses (e.g., low quality of service or product) and thus to direct workplace improvements toward these areas, if appropriate. (Oxenburgh, Maurice S. 1997)

METHODOLOGY

Overall process of Refractory block Manufacturing

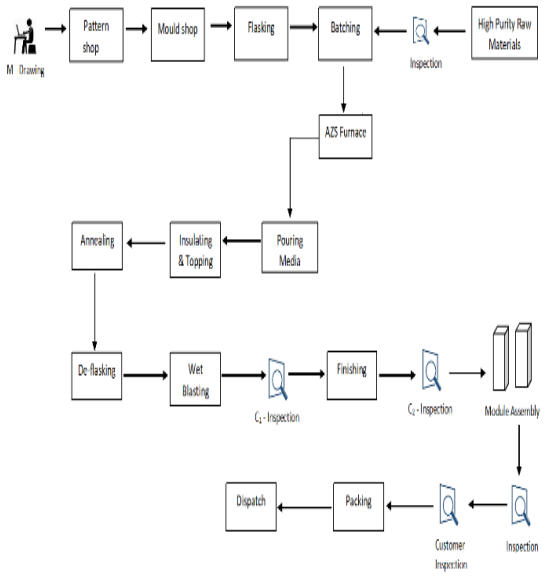

Fig 1: Refractory block Manufacturing from sand mixture (ZrO_2, Al_2O_3 and SiO_2)

PROCESS DESCRIPTION

Figure 1. shows the standard and regular procedure of refractory block manufacturing from ZrO_2, Al_2O_3 and SiO_2.

M – DRAWING

The diagram helps to design the size and dimensions of the plywood pattern which was used to make electro fused refractories. It is also known as Manufacturing drawing.

PATTERN & MOULD SHOP

A plywood module was created by the reference of M – drawing. The pattern was filled by the mixture of silica sand, furfural resin (1%) and catalyst (30-40 %)

FLASKING

The dried mould, fixed on the bin and the mould was tied with chill plates (which helps

for slow release of temperature from the bin). Finally, grog was added to the entire bin.

RAW MATERIALS

The raw materials which is used for making elctrofused refractories is mostly Zirconia, Alumina and Silica (ZrO_2, Al_2O_3 and SiO_2). Usually, it is imported from abroad and some from northern part of india.

BATCHING

Quality check for the raw material was checked and the qualified batch of raw materials added a particular composition which was instructed by technical department. According to that, a mixture was prepared at batching plant

AZS FURNACE

A furnace is a setup of three graphite electrodes which was named as alpha, beta and gamma. The batching plant raw material was added to the furnace by using the bucket elevator and melted by using high electro voltaic temperature (up to 1800˚C using 30KV power). It takes nearly 40 minutes to completely melt one batch of raw materials. The melt was poured in a pouring media (flasked mould) and the sand mixture (ZrO_2, Al_2O_3 and SiO_2) were topped at the top of the surface.

ANNEALING

Annealing is the heat treatment process used mostly to increase the ductility and reduce the hardness of the material. The poured media kept for an annealing period for 7 - 10 days for small and medium size blocks. For, large size blocks (or) more weighted block it take 23 -27 days annealing period to reduce the high amount of heat to normal handling temperature.

DE-FLASKING & WET BLASTING

Removal of grog and chill plates which was used in flasking to make the pouring media much stronger. The produced block was removed and cleaned using wet blasting method. A high pressurized water (up to 400 bar pressure) which was used to remove the dust and impurities present on the refractory block. The block pours and molecular strength and structure was checked before move to finishing process.

FINISHING

The accepted blocks further process like refractory block headers were cut off by using cutting machines and further process like milling, grinding, critical cutting, drilling and polishing process were done by the concern machines.

ASSEMBLY

The processed and accepted blocks from finishing area were checked for the shape and dimensions. Then it was arranged accordingly to its final M - drawing module and type.

Sound Level Meter (SLM) Readings in Finishing Area

Machine Name	Condition (dBA)		Motor (dBA)	With Load (dBA)	Hori. Motor (dBA)	Verti. Motor (dBA)	Filter press pump (dBA)	Water pump (dBA)	Blower (dBA)
	OFF	ON							
VBS - 2A	79.9 dBA	84.7 dBA	96.4 dBA	98.8 dBA	85.5 dBA	NA	84.2 dBA	83.6 dBA	NA
VBS - 2B	78.4 dBA	87.2 dBA	96.8 dBA	99.4 dBA	84.6 dBA	NA	83.8 dBA	84.1 dBA	NA
VBS - 2C	81.4 dBA	85.9 dBA	95.2 dBA	101.4 dBA	85.6 dBA	NA	83.5 dBA	83.8 dBA	NA
Bridge Grinder – 1	80.6 dBA	85.4 dBA	96.3 dBA	98.8 dBA	NA	NA	84.2 dBA	84.5 dBA	NA
Bridge Grinder – 2	77.8 dBA	84.8 dBA	97.1 dBA	98.4 dBA	NA	NA	83.8 dBA	83.6 dBA	NA
Radial Drilling Machine – 1	80.3 dBA	84.6 dBA	92.7 dBA	99.7dBA	NA	84.2 dBA	NA	83.4 dBA	NA
Radial Drilling Machine – 2	79.2 dBA	83.8 dBA	91.4 dBA	104.2 dBA	NA	83.6 dBA	NA	84.2 dBA	NA
Radial Drilling Machine – 3	81.4 dBA	85.1 dBA	93.3 dBA	102.3 dBA	NA	84.7 dBA	NA	84.1 dBA	NA
Polishing Machine - 1	79.8 dBA	83.9 dBA	86.7 dBA	97.2 dBA	NA	84.6 dBA	NA	83.3 dBA	NA
Polishing Machine - 2	77.8 dBA	82.4 dBA	87.8 dBA	98.7 dBA	NA	85.4 dBA	NA	82.1 dBA	NA
Polishing Machine - 3	80.2 dBA	84.3 dBA	86.2 dBA	97.6 dBA	NA	84.5 dBA	NA	83.6 dBA	NA
VRSG - 1	79.8 dBA	84.7 dBA	96.8 dBA	100.8 dBA	NA	NA	84.3 dBA	83.5 dBA	84.7 dBA
VRSG – 2	78.6 dBA	87.3 dBA	96.4 dBA	99.7 dBA	NA	NA	83.6 dBA	84.2 dBA	85.6 dBA
VRSG – 3	81.4 dBA	85.4 dBA	95.8 dBA	101.4 dBA	NA	NA	83.4 dBA	83.7 dBA	86.4 dBA
VRSG – 6	79.5 dBA	84.8 dBA	96.7 dBA	101.8 dBA	NA	NA	84.1 dBA	83.6 dBA	84.3 dBA
VRSG – 7	81.6 dBA	86.7 dBA	97.2 dBA	98.4 dBA	NA	NA	84.6 dBA	84.3 dBA	85.6 dBA
VRSG – 8	78.7 dBA	86.2 dBA	96.2 dBA	99.2 dBA	NA	NA	83.9 dBA	84.6 dBA	84.8 dBA
VRSG – 10	80.2 dBA	85.7 dBA	96.3 dBA	98.2 dBA	NA	NA	86.3 dBA	85.1 dBA	84.1 dBA
VRSG – 11	79.2 dBA	87.4dBA	96.6 dBA	101.4 dBA	NA	NA	85.7 dBA	83.8 dBA	87.7 dBA
VRSG - 12	80.6 dBA	86.7 dBA	97.4 dBA	99.6 dBA	NA	NA	83.9 dBA	84.3 dBA	86.1 dBA
VRSG* – 5	79.4 dBA	85.1 dBA	93.2 dBA	97.2 dBA	NA	NA	81.6 dBA	82.3 dBA	83.8 dBA
VRSG* – 9	78.6 dBA	87.3 dBA	96.4 dBA	99.7 dBA	NA	NA	83.6 dBA	84.2 dBA	85.6 dBA

Tab 1 (a): SLM initial readings in finishing area machines

Machine Name	Condition (dBA)		Motor (dBA)	With Load (dBA)	Hori. Motor (dBA)	Verti. Motor (dBA)	Filter press pump (dBA)	Water pump (dBA)	Blower (dBA)
	OFF	ON							
VBS - 2A	79.9 dBA	84.7 dBA	96.4 dBA	98.8 dBA	85.5 dBA	NA	84.2 dBA	83.6 dBA	NA
VBS - 2B	78.4 dBA	87.2 dBA	96.8 dBA	99.4 dBA	84.6 dBA	NA	83.8 dBA	84.1 dBA	NA
VBS - 2C	81.4 dBA	85.9 dBA	95.2 dBA	97.8 dBA	85.6 dBA	NA	83.5 dBA	83.8 dBA	NA
Bridge Grinder – 1	80.6 dBA	85.4 dBA	96.3 dBA	98.8 dBA	NA	NA	84.2 dBA	84.5 dBA	NA
Bridge Grinder – 2	77.8 dBA	84.8 dBA	97.1 dBA	98.4 dBA	NA	0	83.8 dBA	83.6 dBA	NA
Radial Drilling Machine – 1	80.3 dBA	84.6 dBA	92.7 dBA	99.7dBA	NA	84.2 dBA	NA	83.4 dBA	NA
Radial Drilling Machine – 2	79.2 dBA	83.8 dBA	91.4 dBA	98.2 dBA	NA	83.6 dBA	NA	84.2 dBA	NA
Radial Drilling Machine – 3	81.4 dBA	85.1 dBA	93.3 dBA	98.5 dBA	NA	84.7 dBA	NA	84.1 dBA	NA
Polishing Machine - 1	79.8 dBA	83.9 dBA	86.7 dBA	97.2 dBA	NA	84.6 dBA	NA	83.3 dBA	NA
Polishing Machine - 2	77.8 dBA	82.4 dBA	87.8 dBA	98.7 dBA	NA	85.4 dBA	NA	82.1 dBA	NA
Polishing Machine - 3	80.2 dBA	84.3 dBA	86.2 dBA	97.6 dBA	NA	84.5 dBA	NA	83.6 dBA	NA
VRSG - 1	79.8 dBA	84.7 dBA	96.8 dBA	96.4 dBA	NA	NA	84.3 dBA	83.5 dBA	84.7 dBA
VRSG – 2	78.6 dBA	87.3 dBA	96.4 dBA	99.7 dBA	NA	NA	83.6 dBA	84.2 dBA	85.6 dBA
VRSG – 3	81.4 dBA	85.4 dBA	95.8 dBA	97.1 dBA	NA	NA	83.4 dBA	83.7 dBA	86.4 dBA
VRSG – 6	79.5 dBA	84.8 dBA	96.7 dBA	97.6 dBA	NA	NA	84.1 dBA	83.6 dBA	84.3 dBA
VRSG – 7	81.6 dBA	86.7 dBA	97.2 dBA	98.4 dBA	NA	NA	84.6 dBA	84.3 dBA	85.6 dBA
VRSG – 8	78.7 dBA	86.2 dBA	96.2 dBA	99.2 dBA	NA	NA	83.9 dBA	84.6 dBA	84.8 dBA
VRSG – 10	80.2 dBA	85.7 dBA	96.3 dBA	98.2 dBA	NA	NA	86.3 dBA	85.1 dBA	84.1 dBA
VRSG – 11	79.2 dBA	87.4dBA	96.6 dBA	96.9 dBA	NA	NA	85.7 dBA	83.8 dBA	87.7 dBA
VRSG - 12	80.6 dBA	86.7 dBA	97.4 dBA	99.6 dBA	NA	NA	83.9 dBA	84.3 dBA	86.1 dBA
VRSG* – 5	79.4 dBA	85.1 dBA	93.2 dBA	97.2 dBA	NA	NA	81.6 dBA	82.3 dBA	83.8 dBA
VRSG* – 9	78.6 dBA	87.3 dBA	96.4 dBA	99.7 dBA	NA	NA	83.6 dBA	84.2 dBA	85.6 dBA

Tab 1 (b): SLM readings after engineering control in finishing area machines

RULA – RELA tool based ergonomic assessment readings

Risk Assessment	Re-design of workplace is not needed	Re-design of workplace is recommended	Re-design of workplace is necessary
Posture - Force - Motion	0-2	3-4	≥5
Manual Handling (MH) of Loads: Lifting - Carrying	0-24	25-49	≥50
Manual Handling (MH) of Loads: Pushing - Pulling	0-24	25-49	≥50
Final Risk Score	8	84	240

Tab 2 (a): Risk assessment score criteria

Work Station	Job	Task	Score			Final Risk Score
			Posture - Force - Motion	Manual Handling (MH) of Loads: Lifting - Carrying	Manual Handling (MH) of Loads: Pushing - Pulling	
Graphite Mould Shop	Graphite Taking	Graphite Taking	0	108	13	240
Pattern Shop	Header Making	Header Making	5	0	0	240
RM Shed	Bag Cutting	Bag Cutting	0	220	78	240
RN Station	RN Chill Plate Lifting	RN Chill Plate Lifting	0	32	0	84
RN Station	Wet Blasting	Wet Blasting	8	5	5	240
RT Station	RT Chill Plate Lifting	RT Chill Plate Lifting	0	32	0	84
RM Shed	Unloading Raw Materials	Unloading	7	174	98	240
Finishing	Bridge Grinder – 2	Grinding	4	0	0	84
Finishing	Radial Drilling Machine – 2	Drilling	5	0	9	240
Finishing	Edge Grinder – 1	Grinding	4	0	0	84
Finishing	Merkle Saw	Cutting	2	24	75	240
Finishing	Polishing Machine – 2	Polishing	5	0	18	240
Finishing	VBS – 3A	Cutting	4	0	0	84
Finishing	VRSG – 1	Milling	2	0	0	8

Tab 2(b): RULA–RELA tool based initial ergonomics assessment readings

Work Station	Job	Task	Score			Final Risk Score
			Posture - Force - Motion	Manual Handling (MH) of Loads: Lifting - Carrying	Manual Handling (MH) of Loads: Pushing - Pulling	
Graphite Mould Shop	Graphite Taking	Graphite Taking	0	45	13	84
Pattern Shop	Header Making	Header Making	4	0	0	84
RM Shed	Bag Cutting	Bag Cutting	0	48	35	84
RN Station	RN Chill Plate Lifting	RN Chill Plate Lifting	0	32	0	84
RN Station	Wet Blasting	Wet Blasting	4	5	5	84
RT Station	RT Chill Plate Lifting	RT Chill Plate Lifting	0	32	0	84
RM Shed	Unloading Raw Materials	Unloading	3	38	43	84
Finishing	Bridge Grinder – 2	Grinding	4	0	0	84
Finishing	Radial Drilling Machine – 2	Drilling	3	0	9	84
Finishing	Edge Grinder – 1	Grinding	4	0	0	84
Finishing	Merkle Saw	Cutting	2	24	45	84
Finishing	Polishing Machine – 2	Polishing	4	0	18	84
Finishing	VBS – 3A	Cutting	4	0	0	84
Finishing	VRSG – 1	Milling	2	0	0	8

Tab 2(c): RULA–RELA tool based final ergonomics assessment readings

Initially, an ergonomic issues and risks were detailly analyzed and recorded accordingly. Based on that data, identified noise and physical work due to bad ergonomic condition are the high-risk activity. The noise level was mapped all over the plant and found it was more than 95 dBA. Using that data, the machine was covered with a guard and changed machine operating RPM. It minimized the noise level and it came to the industry acceptable noise exposure level below 90 dBA. The workers working hours per day and their physical exposure to the work was completely studied and score calculated using RULA-REBA based ergonomic screening tool. It consists of posture-force-motion, pushing-pulling, lifting-carrying. The risk assessment was done by hierarchy of controls method which includes elimination, substitution, engineering controls, administrative controls and proper usage of personal protective equipment (PPE's). The high-risk works was shortlisted & fixed, making changes in standard

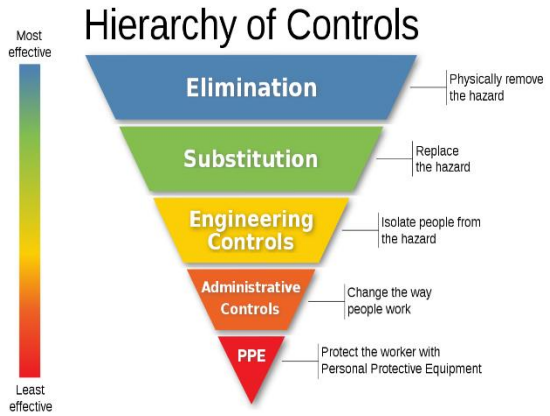

Fig 2: Hierarchy based risk assessment

operating procedure (SOP), key point safety for the work and also change in postures. After the successful implementation of these system, an ergonomic risk was reduced very effectively and shows the better results than the previous.

DISCUSSION

Table 1(b) and 2(c) shows that ergonomic risks (noise and bad working conditions) were found and encountered with the help of Fig 2: hierarchy of controls by making proper engineering measures and controls like change in design, work process control, increasing the manpower for a specific work (or) task, elimination of critical work (or) alternative solution, changing the workers frequently who are expose to bad ergonomic situations.

CONCLUSION

The purpose is this project is to identify the ergonomics problems and risk factors among process industry workers. According to that, a detailed analysis was conducted among workers, found that noise and posture are the major ergonomic issues. A complete mapping data collected by using Sound Level Meter (SLM), dose batch and ergonomic screening tool. Based on these data an engineering

controls (change in design) and behavioral controls like periodical maintenance, change in Standard Operating Procedure (SOP), machine guard (to minimize the noise level) was implemented. After that implementation the posture and noise-based issues reduced from 78% to 45%

REFERENCES

1. Jaffar, N., Abdul-Tharim, A. H., Mohd-Kamar, I. F., Lop, N. S., A Literature Review of Ergonomics Risk Factors in Construction Industry, The 2nd International Building Control Conference 2011. Journal of Procedia Engineering, Vol. 20 (2011), p.89.
2. Carayon, P. (2011). Handbook of human factors and ergonomics in health care and patient safety. London: CRC Press. London: CRC Press.
3. Costa, G. (2003). Factors influencing health of workers and tolerance to shift work. Theoretical issues in ergonomics science. 4(3-4), 263-288.
4. Dembe, A. E., Erickson, J. B., Delbos, R. G., & Banks, S. M. (2005). The impact of overtime and long work hours on occupational injuries and illnesses: new evidence from the United States. Occupational and environmental medicine 62(9), 588-597.
5. Freivalds, A., & Niebel, B. W. (2009). Niebel's methods, standards and work design. New York: McGraw Hill International Edition
6. Karwowski, W. (2001). International encyclopedia of ergonomics and human factors (Vol. 3). London: CRC Press.
7. Stanton, N. A., Hedge, A., Brookhuis, K., Salas, E., Hendrick, H., Handbook of Human Factors and Ergonomics Methods. 2005, CRC Press LLC, Brunel University, Uxbridge, London, UK.
8. Van der Mole, H. F., Sluiter, J. K., Frings-Dresen, M. H. W., Behavioural change phases of different stakeholders involved in the implementation process of ergonomics measures in bricklaying. Journal of Applied Ergonomics, Vol. 36 (2005), p.449.
9. U.S. Department of Labor, Occupational Safety and Health Administration (OSHA), 3125, Ergonomics: The Study of Work. 2000 (Revised).
10. Hess, J. A., Hecker, S., Weinstein, M., Lunger, M., A participatory ergonomics intervention to reduce risk factors for low-back disorders in concrete laborers. Journal of Applied Ergonomics, Vol. 35 (2004), p.427

ACKNOWLEDGMENT

I acknowledge Saint-gobain, perunduari and NSN college management who gave support to this project, my father Mr. P. Thirumurugan and my friends who helped in this project

Frequency Based Multi User Miso Systems in Interference Exploitation Pre-Coding

[1]G. Ramya, [2]Mr. R. Sankarnarayanan

[1]PG SCHOLAR, Master of Engineering in communication systems, A.R.J College of Engineering and Technology,Mannargudi (ANNAUNIVERSITY)
[2]Assistant Professor, Dept of ECEA.R.J College of Engineering and Technology,Mannargudi

Abstract— Interference-exploitation precoding for multi-level modulations in the downlink of multi-user multiple-input single-output (MU-MISO) systems. Mobiles have been playing a major role in the world. The number of served users is not larger than the number of transmit antennas at the base station (BS), we mathematically derive the optimal precoding structure based on the Karush-Kuhn Tucker (KKT) conditions. By formulating the dual problem, the precoding problem is transformed into a pre-scaling operation using quadratic programming (QP) optimization. Its gives better communication between one person and another. But air passengers are required by the law to switch off their mobile phones on board any flight. Prior to the change, the regulations clearly barred the use of cellphones during all phases of a flight. Passengers were only allowed to switch the phones on after the plane had landed and taxied off the active runway. We also present the condition under which multiplexing more streams than the number of transmit antennas is achievable. For both considered scenarios, we propose a modified iterative algorithm to obtain the optimal precoding matrix, as well as a sub-optimal closed-form precoder. In flight take on the message can pass to the pilot and pilot can send the information for the particular passenger. In proposed we use wired network in flying pass the information from air mode to ground mode with need of pilots help. Numerical results validate our derivations on the optimal precoding structures for multi-level modulations, and demonstrate the superiority of interference exploitation precoding for both scenarios.

Keywords— multi-user multiple-input single-output (MU-MISO), Karush-Kuhn Tucker (KKT), precoding.

INTRODUCTION

Voice communication between aircraft and controller on ground has been and still the backbone link for issuing clearances, directions, and guidance to aircraft. In our project we allocate particular spectrum without interference to the users. Air mode to ground mode users can also access that spectrum geographically located to support various route structure controller-to-pilot communications. Pilot Data Communication improves capacity and safety under the net centric environment where aircraft will be a node on the network, however, communication between aircraft and ground controllers as of today are plain and no security measures in place. So our proposed method use encryption technique during communication to avoid information hacking problem.

Precoding has been widely studied in multi-antenna wireless communication systems to simultaneously support data transmission to multiple users. When the channel state information (CSI) is known at the transmitter side, dirty paper coding (DPC) that subtracts the interference prior to transmission achieves the channel capacity. Despite its promising performance, DPC is generally difficult to implement in practical wireless systems, due to its impracticalassumption of an infinite source alphabet and prohibitive complexity. Therefore, sub-optimal approximations of DPC in the form of Tomlinson-Harashimaprecoding (THP) and vectorperturbation (VP) precoding have been proposed, respectively. While offering near-optimal performance, both THP and VP approaches are still non-linear precoding methods and include a sphere-search process, which makes their complexity still unfavorable, especially when the number of data streams is large. Accordingly, low-complexity linear precoding methods such as zero-forcing (ZF) and regularized ZF (RZF) have become popular. On the other hand, downlink precoding based on optimization has also received increasing research attention.

Among optimizationbased precoding methods, the two most well-known designs are referred to as signal-to-noise-plus-interference ratio (SINR) balancing and power minimization, where SINR balancing aims to maximize the minimum received SINR subject to a total transmit power constraint or a per-antenna power constraint, and power minimization targets minimizing the power consumption at the transmitter side while guaranteeing a minimum SINR at each receiver For both the closed-form precoding schemes and the optimization-based precoding approaches described above, the CSI at the base station (BS) is exploited to design the precoding strategy that eliminates, avoids or limits interference. The above approaches ignore the fact that the information in the transmitted data symbols themselves can also be exploited

in the downlink precoding design on a symbol-by-symbol basis for further performance improvements. With information about the data symbols and their corresponding constellations, the instantaneous interference can be divided into constructive interference (CI) and destructive interference.

EXISTING SYSTEM

In existing system Passenger enter into the plane we use mobile. The flight is take off strictly instruct passenger switch off the mobile or put into flight mode. European Aviation Safety Agency (EASA) says that electronic devices do not safety on while flying. Airline passengers have to switch devices to flight mode and make calls from the airport terminal. The calls are made by spectrum in flying the signal cannot be reach properly and second thing is While India doesn't permit voice communication, some foreign airlines allow passengers to make phone calls using spectrum-based technology. In this method has lot of problem to communicate important messages.

Disadvantages:

- ❖ Cannot send or receive calls, texts, and email or downloads when the phone is on airplane mode
- ❖ The most important message communication can be stopped by airplane mode
- ❖ Plane has reached an altitude cell phones can be automatically convert to airplane mode
- ❖ Undermining the safety of the flight

PROPOSED SYSTEM

In Proposed system we can solve the problem of flight mode in planes .In flight mode, mobiles can have lot of problems. The communication can be stop by the passenger. The spectrum signal cannot be reached an altitude areas. So the message passing is not impossible. Here we communicate the information to ground mode with help of pilot. Pilot contains some frequency, it used to send the data from flight mode to ground mode.To solve the problem by using modified iterative algorithm.Interference-exploitation precoding for multi-level modulations in the downlink of multi-user multiple-input single-output (MU-MISO) systems.we mathematically derive the optimal precoding structure based on the Karush-Kuhn Tucker (KKT) conditions. By formulating the dual problem, the precoding problem is transformed into a pre-scaling operation using quadratic programming (QP) optimization. Secure and efficient communication can be possible by using this technology.

Advantages:

- ❖ Can send and receive information effectively
- ❖ Clearly made it easier to communicate
- ❖ Message delay and loss can be controlled
- ❖ Cannot hack the information

CONCLUSION

In a network technology that can detect available channels in a wireless spectrum and change transmission parameters enabling more communications in an airplane mode to run concurrently operate the signals using pilot. Radio uses a number of technologies including Adaptive Radio (where the communications system monitors and modifies its own performance). To improve the utilization efficiency of the radio spectrum by increasing detection reliability and decreasing sensing time. The proposed scheme theInterference-exploitation precoding for multi-level modulations in the downlink of multi-user multiple-input single-output (MU-MISO) systems can be used properly and mathematically derive the optimal precoding structure based on the Karush-Kuhn Tucker (KKT) conditions are satisfied. By formulating the dual problem, the precoding problem is transformed into a pre-scaling operation using quadratic programming (QP) optimization are executed and communicated with other person correctly.

Applications:

- Used in satellite unit
- Used for an secure communications
- Used in Airplane

Reference

1. G. L. Klein, "The Human Air Traffic Management Role in a Highly Automated Air Traffic System," The MITRE Corporation, Tech. Rep., Jun. 1992
2. M. Schafer, V. Lenders, and I. Martinovic, "Experimental analysis of ¨ attacks on next generation air traffic communication," in Int. Conf. on Applied Crypto and Network Security (ACNS). Springer, Jun. 2013
3. W. Zhang, M. Kamgarpour, D. Sun, and C. J. Tomlin, "A hierarchical flight planning framework for air traffic management," Proceedings of the IEEE, vol. 100, no. 1, pp. 179–194, 2012
4. M. Mahmoud, A. Pirovano, and N. Larrieu, "Aeronautical communication transition from analog to digital data A network security survey," Elsevier Computer Science Review, vol. 11, May 2014.
5. K. Sampigethaya, R. Poovendran, and L. Bushnell, "Secure operation, control, and maintenance of future e-enabled airplanes," Proceedings of the IEEE, vol. 96, no. 12, pp. 1992–2007, 2008
6. T. Stelkens-Kobsch, A. Hasselberg, T. Muhlhausen, and ¨ N. Carstengerdes, "Towards a more secure ATC voice communications

system," in IEEE/AIAA Digital Avionics Systems Conf. (DASC), 2015.
7. R. Fantacci, S. Menci, L. Micciullo, and L. Pierucci, "A secure radio communication system based on an efficient speech watermarking approach," Security and Communication Networks, vol. 2, no. 4, 2009.
8. M. Strohmeier, V. Lenders, and I. Martinovic, "On the Security of the Automatic Dependent Surveillance-Broadcast Protocol," IEEE Communications Surveys & Tutorials, vol. 17, no. 2, 2015.
9. K. Sampigethaya, R. Poovendran, S. Shetty, T. Davis, and C. Royalty, "Future e-enabled aircraft communications and security The next 20 years and beyond," Proceedings of the IEEE, vol. 99, no. 11, 2011.
10. P. Marks. (2011, Sep) Air traffic system vulnerable to cyber attack. New Scientist. [Online]. Available: http://www.newscientist.com/article/ mg21128295.600-air-traffic-system-vulnerable-to-cyber-attack.html
11. H. Kelly. (2012, Jul.) Researcher: New air traffic control system is hackable. CNN. [Online]. Available: http://edition.cnn.com/2012/07/ 26/tech/web/air-traffic-control-security/index.html
12. A. Greenberg. (2012, Jul.) Next-gen air traffic control vulnerable to hackers spoofing planes out of thin air. Forbes. [Online]. Available: http://www.forbes.com/sites/andygreenberg/2012 /07/25/ next-gen-air-traffic-control-vulnerable-to-hackers-spoofing-planes-out-of-thin-air/
13. K. Zetter. (2012, Jul.) Air traffic controllers pick the wrong week to quit using radar.
14. S. Henn. (2012, Aug.) Could the new air traffic control system be hacked? NPR. [Online].
15. A. Costin and A. Francillon, "Ghost in the Air (Traffic): On insecurity of ADS-B protocol and practical attacks on ADS-B devices," in Black Hat USA, 2012.

Security Improvement of Dropper Elemination Scheme for 5G Based Wireless Network

[1] Ragavan K,[2]Kalaiselvan K,[3]Akash R

[1] *MRK Institute of Technology, Kattumannarkoil*

Abstract— Eliminate the eavesdropper collusion occurred by the two or more devices communicating via optimal relay with centralized router using 5G network.

The overall delay is reduced with increase in throughput.

This project studies the important of wireless communication under eavesdropper collusion where detecting the dropper node.

To provide knowledge about the security improvement in wireless communication network by using Network Layer algorithm.

INTRODUCTION

DEVICE-to-device (D2D) communication is expected to be a core part of the forthcoming fifth-generation (5G) mobile communication networks. D2D can operate both in the licensed and unlicensed spectrum and is generally transparent to thecellular networkasitallowsadjacent userequipment (UE)to bypass the base station (BS) and establish direct links between them, to either share their connection and act as relay stations, or directly communicate and exchange information. D2D can be used to implement many of the 5G requirements, because it can support high bit rates and minimize the delay between D2D UEs. The gains of D2D communications in spectral efficiency, resource reallocation, and reduction of interference [1], [2] can potentially improve throughput, energy efficiency, delay, andfairness [3], [4]. In addition, due to shorter communication distances, D2D can offer lower power consumption for the communicating D2D devices. D2D can enable mobile traffic 41 offloading, so overall one can anticipate that the non-D2D UEs 4can also benefit from the mobile traffic offloading because they will, as a result, have access to more bandwidth for the com-munication between them (non-D2D UEs) and the BS, as well as less interference [3], [4]. However, in order to fully realize D2D, several challenges need to be resolved, including device discovery, mode selection, interference management, power control, security, radioresource allocation, celldensification and offloading, quality of service (QoS) and path selection, use of mmWave communication, noncooperative users, and handover management [24], [34], [35].

This article investigates the idea that the D2D communication is not a global problem that must be solved centrally, but it is an optimization problem that should be solved in a distributed fashion with the use of artificial intelligence. To address that, the articleproposesthatthecontrolishandledbytheUEs,locally,in order to form communication links in shorter time [5]–[13]. We 5 consider that the use of distributed artificial intelligence (AI) control is most suitable in the challenging and dynamic envi- ronment of D2D communication. To the best of our knowledge, therearenosolutionsintheliteraturethatjointlysatisfyallofthe D2D requirements in one approach. We chose intelligent agents because of their ability to concurrently solve multiple complex problems, as it was shown in [38].

In this article we are making the following contributions.

1) We propose a solution using belief desire intention (BDI) software agents with extended capabilities (BDIx), to collectivelysatisfythechallengesidentifiedforD2Dco m- munication.
2) We provide a proof-of-concept algorithm that encom- passes the use of intelligent agents for selecting the D2D transmission mode, while ensuring a high spectral efficiency and low computational load.
3) We propose the use of a new parameter called weighted datarate(WDR)fordecidingtheD2Dtransmissionmod e.
4) Weevaluatetheproposedsolutionundervaryingsce narios 77 and provide insights into its operation. 7

The rest of the article is structured as follows. Section II provides background information on D2D communications and 80 intelligent agents. Section III discusses related work in AI tech- niques for communications and D2D. Section IV presents the proposed solution of distributed control in D2D through

.

BDIx agents and describes the DAIS algorithm. Section V discusses

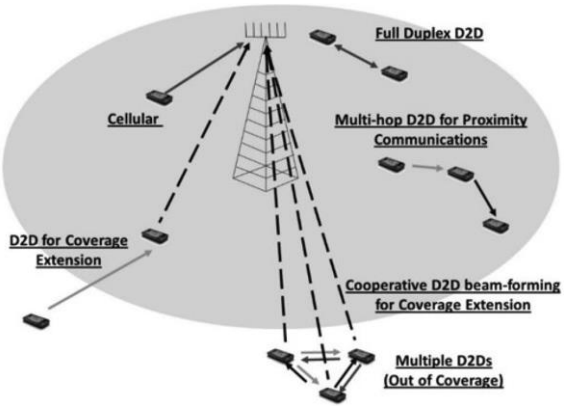

Fig. 1. Transmission in D2D Communication.

the evaluation of the proposed approach, and lastly, Section VI concludes the article.

II. BACKGROUND ON D2D AND INTELLIGENT AGENTS

A. Background on D2D

1) Control of D2D Communication: We can categorize the solutions on D2D communication based on the type of control, as follows.

a) *Centralized*: In centralized techniques the BS completely manages the UE nodes, even when they (UEs) are communicating directly. The controller manages all aspects of interference/connections/path, etc., between cell and D2DUEs.

b) *Distributed*: In a distributed scheme, D2D node manage98 ment does not require a central entity; it is performed autonomously by the UEs themselves. The distributedschemedecreasesthecontrolandcomputationalov erhead. This tactic is more suitable for large size D2D networks. In such a system, all control processes are run in parallel and start at the same time.

c) *Semi distributed*: Despite the fact that both centralized anddistributedschemeshaveuniqueadvantages,tradeoffs can be accomplished between them. Such D2D management schemes are referred to as "semidistributed" or"hybrid".

2) Transmission Mode in D2D Communication: There exist different modes for D2D communication, based on how UEs interact with the BS and other D2D nodes (see Fig. 1).

a) *D2D direct*: Two UEs connect to each other by using licensed or unlicensed spectrum. The two D2D UEs only communicate with each other (also called full-duplex D2D).

b) *D2D single-hop relay*: Sharing of bandwidth between a UE and other UEs. In D2D single-hop relay mode one of the D2D UEs is connected to a BS or access point (AP) and provides access to another D2D UE [29]. c) *D2D multihop relay*: The single-hop mode is extended by enabling the connection of more D2D UEs in chain. Both backhaul and D2D transmissions are performed in anuplinkwithotherD2Drelaynodes(asabridge)andthey aresubjecttothecontroloftheotherD2Drelaynodes[30]. d) *D2D cluster*: D2D cluster is a group of UEs connected toa D2D relay node acting as a cluster head (CH). The D2D relay node acts as an intermediate router to the network through an access point or BS. Clustering is suitable in high user densities [31]–[33].

B. Research Challenges in D2D

InorderforD2DtomatureandshapetheD2Dcommunication for the 5G and beyond wireless communication networks, some technical issues must be resolved [34], [35]. Each of these challenges is further elaborated below.

Device Discovery: In order for two devices (i.e., UEs) to directly communicate with one another, they must first perform a device discovery process to identify that they are close to eachother and in range for D2D communication [2], [18].

Mode Selection: When a pair of D2D candidates identify 139 each other for possible future communication, mode selection 140 is performed. Mode selection implies that a decision is made whethertheD2Dcandidateswillcommunicatedirectlyorviath e conventional cellular network [18]. The communication mode selectionshouldbecarefullychoseninordernottoimpactonthe interference in the network. This communication mode decision is categorized in the following way: 146 a) *Inband D2D communication:*

a) *Reuse/Underlay:*D2Dcommunicationsharesthesame 148 resources with existing cellular UEs. This mode can 149 achieve high spectral efficiency; however, it may cause interference to other cellular and D2D UEs using the 151 cellular resources. b) *Dedicated/Overlay:* The cellular network has abun-dant channel resources so that the D2D UEs can use dedicated resources that are orthogonal to cellular UEs. c) *Cellular:* The two UEs will communicate with each other via the cellular network as traditional cellular UEs. b) *Outband D2D communication:*

a) *Controlled:* In the controlled mode the device has two interfaces.Onthefirstinterfaceitusesunlicensedspec- trum to share with its peers. On the second interface it uses licensed spectrum to connect to the mobile network. b) *Autonomous:* In autonomous mode, the device can only use and communicate with other devices under the unlicensed spectrum, without accessing BS.

3) Interference Management: The communication mode se- lection has a direct impact on the interference in the network. For example when the reuse/underlay resource-sharing mode is selected, high spectral efficiency can be achieved. However, since many D2D and cellular users will use the same portion of spectrum, interference may become a problem. Therefore, interference management must be used [18].

4) Power Control: Although high transmission power can provide wider coverage and better signal quality during D2D communication, it can, at the same time, drain the battery of D2D UEs and cause interference

to the network. Thus, proper power control during D2D communication is vital for control ling the transmission power levels of D2D UEs so as to deal with the interference generated by the D2D UEs and improve spectralefficiency,systemcapacity,coverage,andreduceener gy consumption [19]–[21].

5) Security Concerns: In D2D communications, the routing of users' data is done through other users' devices. This makes the D2D communication network vulnerable to many security risks and malicious attacks that could breach the data privacy and confidentiality. Thus, providing efficient security is a ma jor issue in order to facilitate D2D communication in cellular networks [12], [22], [23].

6) Radio Resource Allocation: Radio resource allocation 193 mainly addresses the issues of how to assign the frequency resources to a group of D2D pairs, or all the D2D pairs, targeting an optimal use of the radio resources focusing also on the interference control and management between D2D and cellular links and the efficient reuse the radio resources whenever the 1 interference is small [18].

7) CellDensificationandOffloading: Providinghighsystem capacity and high per user data rates—will require a densification of the radio access network or the deployment of additional networknodes.Ingeneral,theneedofnetworkdensification[2 4] for performance enhancement dictates the deployment of small coverage cells [18].

8) QoS / Path Selection (Routing): During D2D communi206 cation it is essential to ensure that the QoS requirements of the communication links are satisfied. To achieve this a major issue to handle is the selection of the optimum routing path, otherwise excess resources/power/link usage (bandwidth) willbe wasted [20], [25], [26].

9) D2D in mmWave Communication: Communication usingthe mmWave band has recently received significant attention for 5G cellular networks and D2D communication, as it operates at a higher frequency band (30–300 GHZ) and allows a significant increase in data rates (multi-Gbps) and network capacity [27].

10) Handover of D2D Device: In order to keep the com munication between two D2D devices when these are moving away from each other, handover should be performed. More specifically, when a D2D device is moving away from the access point (e.g., a D2D relay or a D2D cluster head) it is assigned to, then the problem of handing it over to another access point (e.g., another D2D relay or D2D cluster head) with a shared medium 224 should be dealt with [20].

11) Noncooperative Users: An issue to consider for D2D data delivery is that the data delivery in noncooperative D2Dcommunicationmaybeunfairorcompromised.Inthereal world, some rational nodes may have strategic interactions and mayact selfishly for various reasons (such as resource limitations, the lack of interest in data, or social preferences) or even malicious nodes that they may use the data relay to attack anonymously [28].

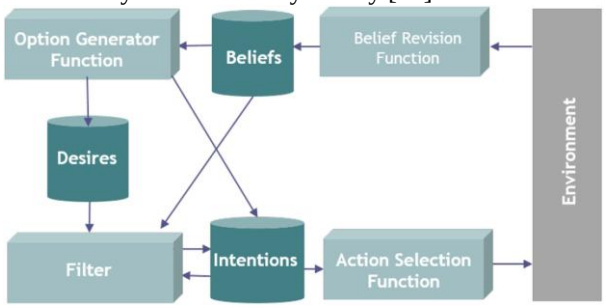

Fig. 2. BDI Agent Architecture.

C. Background on Intelligent Agents and BDI Agents

1) Intelligent Agents: An intelligent agent (IA) is an au- tonomous unit, which observes an environment using sensors and acts upon it using actuators, coordinating its activity in the direction of achieving goals (i.e., it is "rational," asdefined in economics) [14]. Agent theory is concerned with the use of mathematical formalisms for representing reasoning and the properties of agents. Software agents are characterized as computer software that display flexible autonomous behavior, which infers that these systems are capable of independent, autonomous action in order to satisfy their design objectives. Agents are utilized in a lot of applications. For instance, autonomous programs used for operator assistance or data mining (in some cases referred as bots) are also called "intelligent agents".

2) BDIAgents:

ThisworkmakesuseofBDIsoftwareagents, which are agents with three key mental structures (see Fig. 2), namely, informative states of mind around the world (beliefs or convictions), motivational approaches on what to do (desires orwants), and planned responsibilities to take action (intentions or expectations). The BDI model fundamentally relies on two principle forms, i.e., thought and mean send thinking. With the thought processes the agent produces its goals on the premise of its convictions and desires, while mean send thinking comprises of a succession of activities to execute, as an endeavor to satisfy desires [15].

Unique features of BDI agents [16] are as follows:

1) Beliefs: Beliefs correspond to the informational state of the agent. Beliefs can also include inference rules, allowing advance chaining to guide to new beliefs.

2) Desires: Desires correspond to the motivational state of the agent. They characterize objectives or situations that the agent would like to fulfil or bring about.

3) Intentions: Intentions correspond to the deliberative state of the agent. This is what the agent has chosen to perform. Intentions are desires to which the agent has, to some extent, committed.

COVID -19 Lung Image Classification System Based on Multi –Level Thresholding and Support Vector Machine

Mrs U.Lenin Marksia ,Members .Sakthi.s,Rathika.G

Sardar Raja College Of Engineering ,Department of Electronic and Communication Engineering

Abstract:

The early detection of SARS-CoV-2, the causative agent of (COVID-19) is now a critical task for the clinical practitioners .The COVID-19 spread is announced as pandemic outbreak between people worldwide by WHO since 11\March\2020. We present a new e of lung parenchyma Segmentation. We present a new e of lung parenchyma Segmentation. Optimal threshold value method and the boundary tracking method are used to get rid of the background interference and segment the lung region. Then new algorithm is used for lung. The experimental results show the new algorithm can segment lung regions from the chest CT images automatically and accurately. The experimental results show the new algorithm can segment lung regions from the chest CT images automatically and accurately.The help vector gadget classifies the corona affected X-ray images from others through usage of the deep features. The technique is useful for the clinical practitioners for early detection of COVID-19 infected patients. The suggested system of multi-level thresholding plus SVM presented high accuracy in classification of the infected lung with Covid-19. Our algorithm works by maintaining a candidate Support Vector set. All images were of the same size and stored in JPEG format with 512 * 512 pixels.

Keywords:

Coronavirus,COVID19,Multi-levelthersholding,Support Vector Image, Biomedical Image Classification

1. Introduction:

With the rapid development of CT technology, CT images gradually become inspection means of pulmonary diseases in clinical. But the amount of data of lung inspection obtained is very large.

For example, when the slice thickness is less than 1milimetre, scanning the whole lung, the images obtained will reach 500 frames using 16-slice helical CT.

The confirmed SARS-Cov-2, the causative agent of Wuhan new corona virus disease 2019 (COVID-19) cases exceeded SARS-CoV-1, the causative agent of severe acute respiratory syndrome (SARS) cases. At the time of writing this paper, there are currently +740,201 confirmed cases +28,000 critical/serious cases and +35,026 deaths worldwide from the COVID-19 pandemic outbreak as of March 30, 2020, 11:23 GMT. Coronaviruse is often presented with a novel word, as a new strain can be within the virus family, we have all discovered beforehand. As indicated by the World Health Organization (WHO), Coronaviruses belong to a large family that varies from cold to serious disease [1,8]. These diseases can affect humans and animals. The strain that began to spread in Wuhan, the capital of China's Hubei region, was identified from two completely different Coronaviruses namely, Severe acute respiratory syndrome (SARS) and the Middle east respiratory syndrome (MERS). Symptoms of coronary virus infection increase the severity of respiratory complications such as respiratory disorder, kidney disorder and fluid developmentin the lungs. **w**ith the rapid development of CT technology, CT images gradually become inspection means of pulmonary diseases in clinical. But the amount of data of lung inspection obtained is very large. For example, when the slice thickness is less than 1milimetre, scanning the whole lung, the images obtained will reach 500 frames using 16-slice helical CT, while using 64- slice helical CT will receive more than 1000 images. Image segmentation methods include thresholding method, region growing algorithm, based on edge detecting methods, method for segmenting image based on pattern classification, watershed segmentation method, method based on anatomical model[6] and so on.

A broad range of means of COVID-19 medical diagnosis can be conducted to detect the confirmed cases of COVID-19 [8]. These means are contributing together to daily count up each new confirmed case using electronic health records (EHR).

These means of COVID-19 medical diagnosis include clinical characteristics and radiologist's diagnosis. Clinical characteristics involves human temperature monitoring and reverse transcription polymerase chain reaction (RT-PCR) [9]. Based on the human body temperature, patients' body temperatures range within ranges of 36·5–38·8°C [11]. Accordingly, available thermal sensors or thermal images can be collected as instantaneous data to investigate the potential COVID-19 [8]. Reverse transcription polymerase chain reaction (RT-PCR) is a laboratory technique that is used for testing COVID-19 using a blood sample of the case. Using real time RT-PCR test confirms the actual number of confirmed cases globally [13,14]. Moreover, point-of-care testing, Immunoglobulin M (IgM) and detection of antibodies can be applied to detecting infected cases [6,16]. Support Vector Machines (SVM) have recently gained prominence in the field of machine learning and pattern class-sification [8]. Classification is achieved by realizing a linear or non-linear separation surface in the input space.

Through detecting and analyzing the previously mentioned early lung affection

patterns present in the radiological images. This paper presents automatic x-ray COVID-19 lungimage classification system based on multi-level thresholding and supported vector machine. The study is usually recommended for the early detection of COVID-19 infected patients using X-ray images. The help vector gadget classifies the COVID-19 affected lung X-ray images from others through usage of the deep features. The technique is useful for the clinical practitioners for early detection of COVID-19 infected patients.

2. Materials and Methods:

Dataset Characteristics

In total, 40 contrast-enhanced lungs X-ray with 512×512 in-plane resolution. 15normal lung images are from the Montgomery County X-ray Set, while other 25 images

are infected lungs with COVID-19 from covid-chestxray-dataset-master. In total, 20 lungs X-ray with 512×512 in-plane resolution. Among them, 10 normal lung images are from the Montgomery County X-ray Set, and 10 are from the public database covid-chestxray-dataset- master [1].

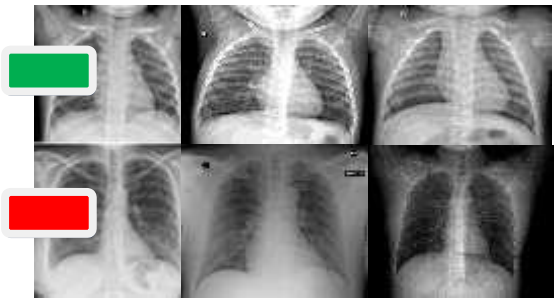

Fig 1. A sample of X-ray images dataset for normal cases (first row) and COVID-19 threshold fails to realize satisfactory results is patients (second row).

Multi-Level Thresholding (MT): A multi-level threshold is a process that splits grey image into several distinct areas. This technique specifies various image thresholds and splits the image into areas with certain intensities that correspond to one background and several objects [6]. The method works very well with coloured objects or complex backgrounds, cases in which a binary level curvature of the lung boundary to that of the ribs. optimal thresholding to automatically select a segmentation threshold for the image volume. Connectivity and topological analysis are used to further refine regions that represent the extracted lungs.

Support Vector Machine (SVM)

SVMs are supervised learning algorithms that can be conducted for both classification or regression applications [22, 23]. SVM optimizes hyperplanes distance and the margin. Hyperplane distance can be maximized based on two-class boundaries using the following equations [24, 25]. It can be seen that training the SVM involves solving a quadratic optimization problem which requires the use of op-timization routines from numerical libraries.

Linear SVM= $W.X_i+b \geq 1$, if $y_i \geq 0$

$$W.X_i + b\, b < -1\,, if\ y_i < 0$$

For i=1,2,3……m. a positive slack variable is added for handling the non lineartity as displaced in equation

$$y_i\,(W.X_i+b) \geq 0-\in \quad ,i=1,2,3\ldots\ldots m$$

Accordingly,the objective function will be as anequation(4)

$$\text{Min} \sum_{i=0}^{i=m} \frac{1}{2} w.w^T + C \sum_{i=0}^{i=m} \in_i$$

given in Eq. (1).

$C_1 \leftarrow p \; if \; 0 \leq p \leq th_1$

$C_2 \leftarrow p \; if \; th_1 \leq p \leq th_2$

$C_{i+1} \leftarrow p \; if \; th_i \leq p \leq th_{i+1}$

$C_n \leftarrow$ p if $th_k \leq$ p $\leq$L-1

Where p is one of the pixels m × n that can berepresented as one of the grayscale levels L1= {0, 1, 2, .., L-1}, C1 and C2 are classes with pixels p, representing {th1, th2, ..., thi, thi + 1,thk} different thresholds. Segmentation of lungs in the setting of scleroderma is a major challenge in medical image analysis. Threshold based techniques tend to leave out lung regions that have increased attenuation, for example in the presence of interstitial lung disease or in noisy low dose CT scans. The purpose of this work isto perform segmentation of the lungs using a technique that selects an optimal threshold for agiven scleroderma patient by comparing the

Where *W* is the weights matrix, *X* is the inputvector, *b* is the bias vector, *y* is the output classes, £$_i$ is the slack variable.

Algorithm 1 simple SVM:

Candidate SV={closest pair from oppositeclasses}

While there are violating
points doFind a violator
CandidatesSV= candidateSV U violator
if any a_p U< 0 due to addition of c to S
thencandidatesSV= candidatesSV\P
repeat till all such points are pruned
en
d if
end
while

3. The Proposed Automatic COVID-19 lungclassification System

The proposed system starts by visualizing apatient's X-ray lung image and applying a

median filter to enhance the contrast of the input images. Then, a multi-level image segmentation threshold based on Otsu objective function is applied. Then, the support vector machine has applied to classify the infected lung from non-infected. The overall procedures are described in detail in the following section along with the steps for each process. The overall architecture of the proposed COVID-19 classification system is described in Fig

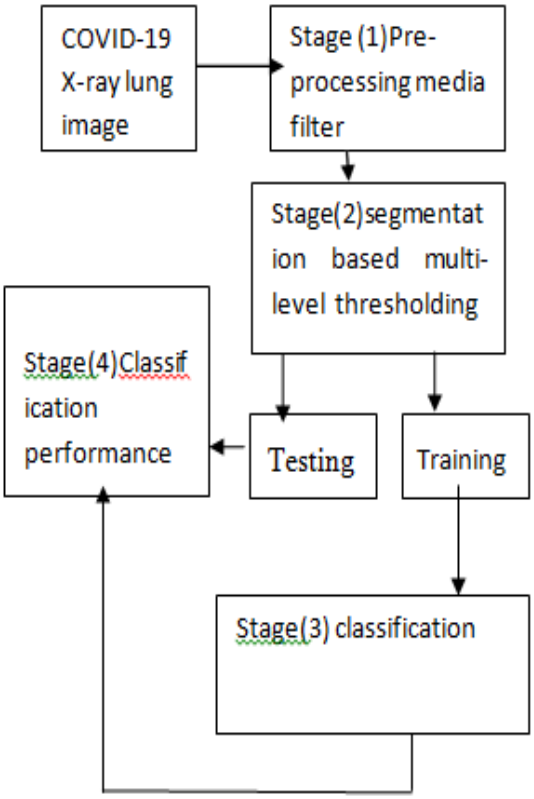

Figure2.The overall COVID-19 classification

workspace. Then multi-level thresholding was conducted to reduce number of objects in lung image the supported vector machine was appliedto classify infected lung with COVID-19. Figure 4 (a-c) shows the image of normal case with normal lungs, Multi-level effects on the normal lung image and the final normal lung image depends on SVM respectively. Figure 4 (d-f) shows the image of COVID-19 case with infected lungs, Multi-level effects on the infected lung image and the final infected lung image depend on SVM, respectively. Sensitivity, specificity, accuracy, for the proposed system. The average sensitivity, specificity, and accuracy of the lung classification using the proposed model results were 95.76%, 99.7%, and 97.48%, respectively as illustrated in Table.1

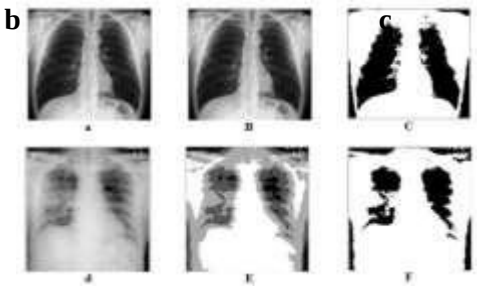

Figure 3 (a)image of normal lungs,(b)multi-l normal lung image,(c) image depend respectively,(d)image o with infected lungs,(e)m the infected lung ima lung image depend on SV

3. Experimental Results and Discussion

This study examined the performance of classification models for identification COVID-19. The experimental studies were implemented using the MATLAB 2019a deep learning toolbox. The results were obtained using a laptop equipped with an Intel Core i7, 18 GB of RAM and an AMD Radeon GPU. MATLAB was used to execute all the graphics and visualization functions. This model reads the data from a graphics file in the MATLAB

5.Conclusion and future work

In the end of March 2020, more than +724000 confirmed cases of COVID 19 and more than +34000 deaths are exist globally where the humanity in our plant currently lives in COVID 19 pandemic. Isolation and social distance are temporary unpractical solution against fightingCOVID-19. Unfortunately, a coronavirus vaccine is expected to take at least 18 months if it works at all. Moreover,

COVID -19 pandemics can mutate into a more aggressive form [8]. Therefore, this paper presents a novel COVID-19 detecting methodology based on multi- level thresholding and SVM for X-ray images The algorithm is based on the characteristic that the CT values of lung tissue have significant difference with the other tissue within the human body. The technique is useful for the clinical practitioner for early detection of COVID-19 infected patient. The model presents high accuracy where the average sensitivity, specificity, and accuracy of the lung classification were 95.76%, 99.7%, and 97.48%, respectively. Machine learning algorithms can present high performance in terms of accuracy and computational complexity [26]. Therefore, the future research may be based on using a modified model of optimized SVM or hybrid ML models. Moreover, larger dataset can be providing higher model generalization.

References:

[1] Allam, Zaheer, and David S. Jones. "On the Coronavirus (COVID- 19) Outbreak and the Smart City Network: Universal Data SharingStandards Coupled with ArtificialIntelligence (AI) to Benefit Urban Health Monitoring and Management." Healthcare. Vol. 8. No. 1. Multidisciplinary Digital Publishing Institute, 2020.

[2] Chen Y, Liu Q, Guo D. “Emerging coronaviruses: Genome structure, replication, and pathogenesis”. J. Med. Virol. 2020 Apr;92(4):418-423.

[3]Chen, Huijun, et al. "Clinical characteristics and intrauterine vertical transmission potential of COVID-19 infection in nine pregnant women: a retrospective review of medical records." The Lancet 395.10226 (2020): 809-815.

[4]Fang, Yicheng, et al. "Sensitivity of chest CT for COVID-19: comparison to RT-PCR." Radiology (2020): 200432.

[5]H. H. Elmousalami and A. E. Hassanien, "Day Level Forecasting for Coronavirus Disease(COVID-19) Spread: Analysis, Modeling and Recommendations," arXiv preprint arXiv:2003.07778, 2020

[6]J. F. Chan et al., “Articles A familial cluster of pneumonia associated with the 2019 novel coronavirus indicating person-to- person transmission : a study of a family cluster,” Lancet, vol. 6736, no. 20, pp. 1–10, 2020.

[7] Lan, Lan, et al. "Positive RT- PCR test results in patients recovered from COVID- 19." Jama (2020).

[8] Nishiura, H., Linton, N. M., & Akhmetzhanov, A. R. (2020). "Serial interval of novel coronavirus (COVID19) infections". International Journal of Infectious Diseases. doi:10.1016/j.ijid.2020.02.060

[9] Novel, Coronavirus Pneumonia Emergency Response Epidemiology. "The epidemiological characteristics of an outbreak of 2019 novel coronavirus diseases (COVID-19) in China." Zhonghua liu xing bing xue za zhi= Zhonghua liuxingbingxuezazhi 41.2 (2020): 145.

[10] Pan, Feng, et al. "Time course of lung changes on chest CT during recovery from 2019 novelcoronavirus (COVID-19)pneumonia." Radiology (2020): 200370.

IFERP International Conference

IFERP Explore

https://irpee21.blogspot.com | irpee21@gmail.com

ISBN : 978-81-909853-5-2